Ordering code Q53-X2795

Coaxial metal-ceramic tetrode, forced-air-cooled, for frequencies up to 110 MHz, particularly suitable for single-sideband communications transmitters up to 30 kW.

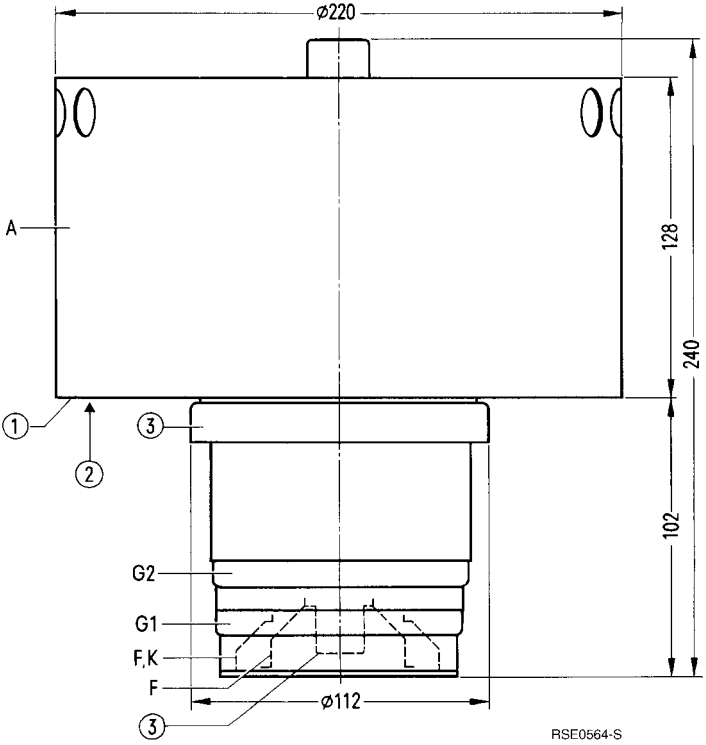

Dimensions in mm

① Tube support
② Air inlet
③ Do not use as terminal

Approx. weight 16 kg

Heating

Heater voltage	U_F	7,5	V
Heater current	I_F	≈ 115	A
Heating: direct			
Cathode: thoriated tungsten			

Characteristics

Emission current at $U_A = U_{G2} = U_{G1} = 400$ V	I_{em}	28	A
Amplification factor of screen grid at $U_A = 3$ kV, $U_{G2} = 1250$ to 1500 V, $I_A = 1{,}8$ A	μ_{g2g1}	4,8	
Transconductance at $U_A = 3$ kV, $U_{G2} = 1250$ V, $I_A = 2$ A	s	35	mA/V

Capacitances

Cathode/control grid	c_{kg1}	≈ 70	pF
Cathode/screen grid	c_{kg2}	≈ 8	pF
Cathode/anode	c_{ka}	≈ 0,18	pF [1])
Control grid/screen grid	c_{g1g2}	≈ 85	pF
Control grid/anode	c_{g1a}	≈ 1,2	pF [1])
Screen grid/anode	c_{g2a}	≈ 28	pF

Accessories		**Ordering code**
Socket (header connector)	RöFsg2795	Q1001-X28

1) Measured by means of a 50 cm diameter screening plate in the screen grid terminal plane.

RF linear amplifier,
single-sideband modulation, grounded cathode circuit, I_{G1} = 0

Maximum ratings

Frequency	f	30	MHz
Anode voltage (dc)	U_A	11	kV
Peak anode voltage	$U_{A\,M}$	25	kV
Screen grid voltage (dc)	U_{G2}	1,6	kV
Control grid voltage (dc)	U_{G1}	– 600	V
Peak RF control grid voltage	$U_{g1\,m}$	600	V
Cathode current (dc)	I_K	28	A
Peak cathode current	$I_{K\,M}$	65	A
Anode dissipation	P_A	25	kW
Anode dissipation (for max. 20 s)	P_A	35	kW
Screen grid dissipation	P_{G2}	350	W
Control grid dissipation	P_{G1}	75	W
Control grid resistance	R_{G1}	10	kΩ

Operating characteristics		I	II	III	
Output power	P_2	0	33	16,5	kW [1]
Anode voltage (dc)	U_A	10	10	10	kV
Screen grid voltage (dc)	U_{G2}	1,5	1,5	1,5	kV
Control grid voltage (dc)	U_{G1}	– 325	– 325	– 325	V
Peak control grid voltage (ac)	$U_{g1\,m}$	0	315	315	V
Anode current (dc)	I_A	1,8	5,25	3,8	A
Screen grid current (dc)	I_{G2}	0	220	110	mA
Anode input power	$P_{B\,A}$	18	52,5	38	kW
Anode dissipation	P_A	18	19,5	21,5	kW
Screen grid dissipation	P_{G2}	0	330	165	W
Efficiency	η	—	63	43,5	%
Anode load resistance	R_A	—	1070	1070	Ω
Third order intermodulation product	d_3	—	—	≥ 45	dB [2]
Fifth order intermodulation product	d_5	—	—	≥ 50	dB [2]

I No modulation
II 1-tone modulation
III 2-tone modulation

1) Circuit losses are not included.
2) Intermodulation product calculated from the total characteristic measured by the differential method at $f \approx 3$ MHz.

Tube mounting

Axis vertical, anode up.

Maximum tube surface temperature

The temperature of the metal-ceramic seals must not exceed 200 °C at any point and the temperature of the anode body must not exceed 220 °C. If an appropriate air duct is provided, the cooling air or part of it can be used to keep the maximum permissible temperature of the metal-ceramic seals.

Forced-air cooling

The minimum air flow rate required for maximum anode dissipation is given in the cooling air diagram valid for 25 °C inlet temperature at a normal air pressure of 1 bar (sea level). The cooling air must be supplied from the side of the electrode terminals. For further information on forced-air cooling refer to “Explanations on Technical Data”.

Safety precautions

The section “Safety precautions” under “Explanations on Technical Data” describes how the tube is to be protected against damage due to electric overload or insufficient cooling. A copper wire with 0,20 mm diameter should be used to test the anode overcurrent trip circuit.

Cooling air diagram

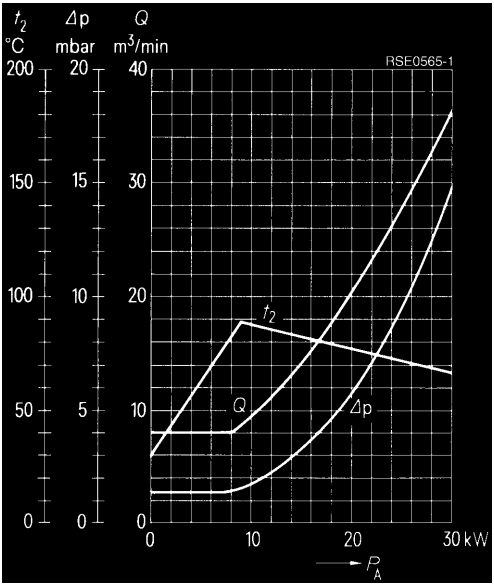

The cooling air is supplied from the electrode terminal side.

Air pressure = 1 bar
t_1 = 25 °C

$U_{G1} = f(U_A)$
$U_{G2} = 400$ V

Parameter = I_A ————————
Parameter = I_{G2} —∘—∘—∘—∘—∘—∘—
Parameter = I_{G1} — — — — — — —

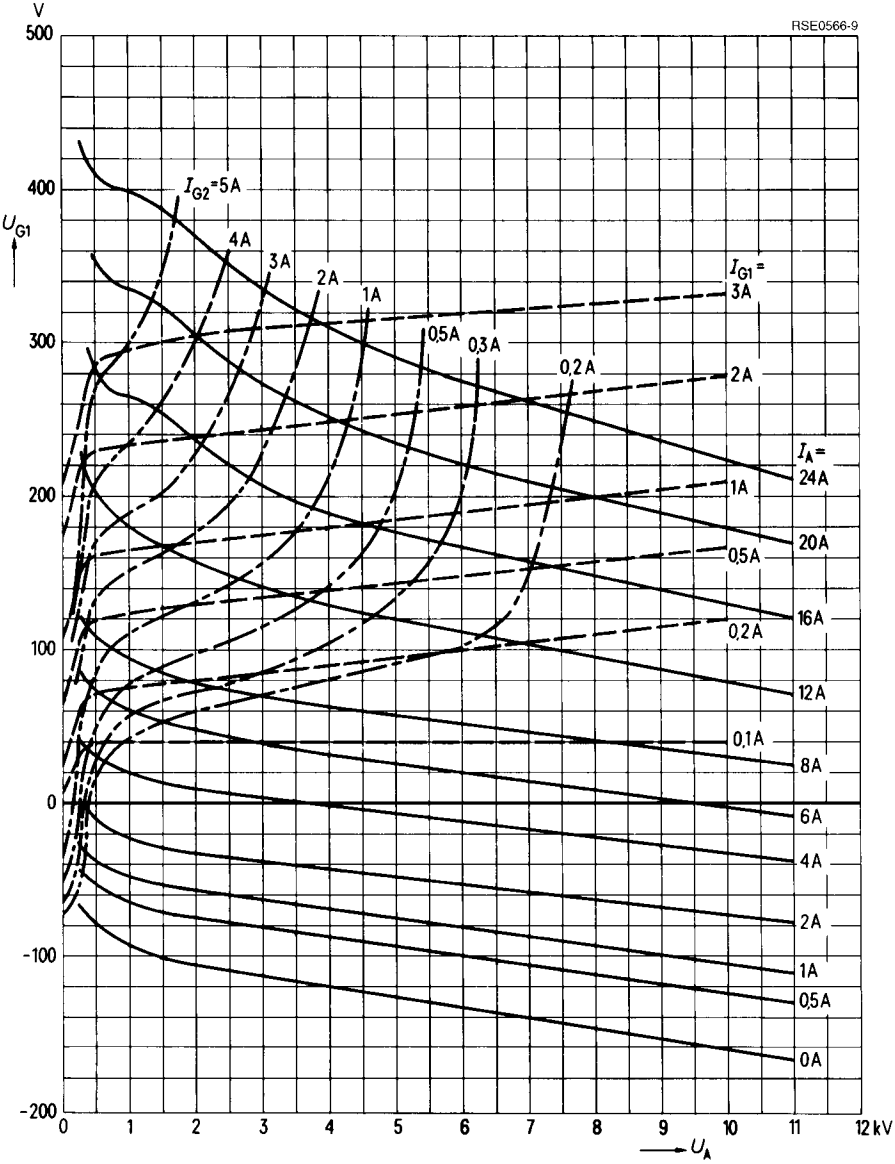

$U_{G1} = f(U_A)$
$U_{G2} = 800$ V

Parameter = I_A ————————
Parameter = I_{G2} —·—·—·—·—
Parameter = I_{G1} — — — — — — —

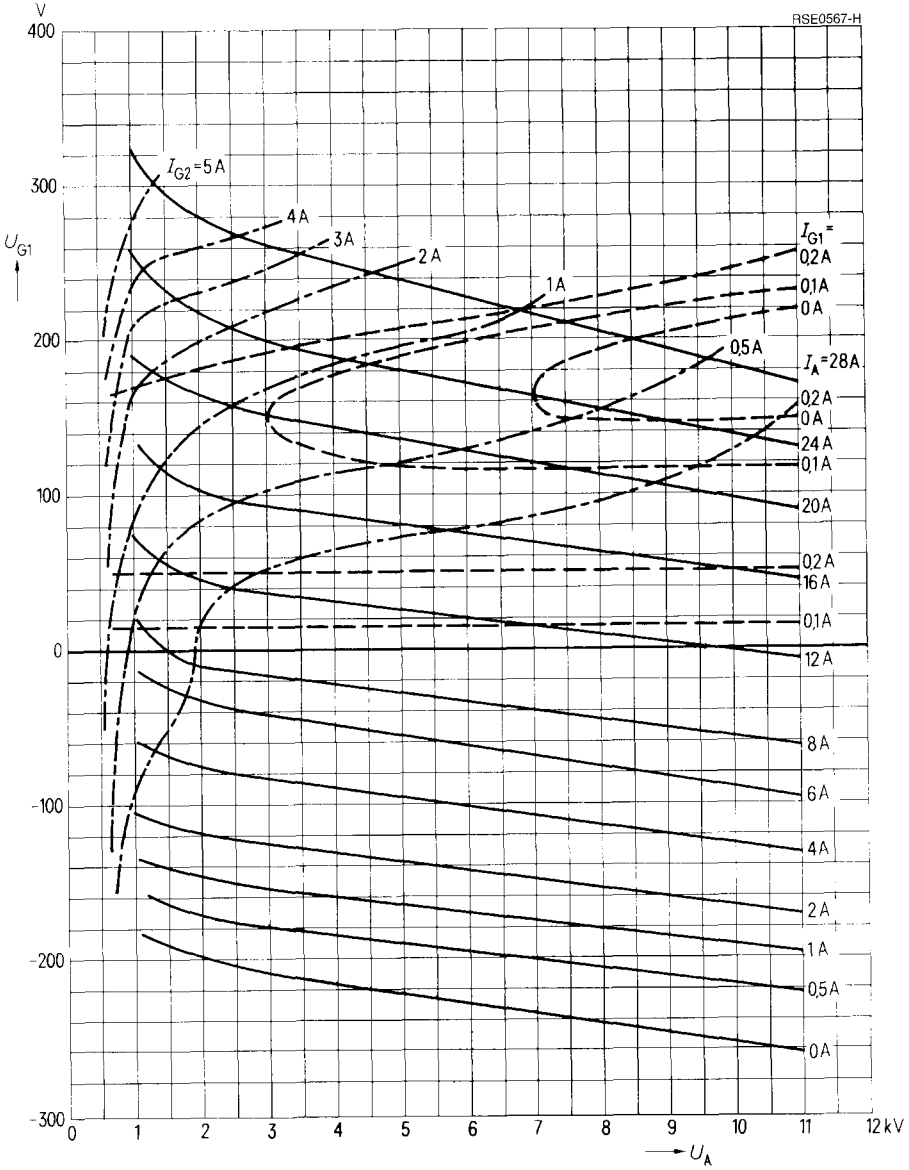

$U_{G1} = f(U_A)$ Parameter = I_A ————————
$U_{G2} = 1200$ V Parameter = I_{G2} —·—·—·—·—
Parameter = I_{G1} — — — — — — —

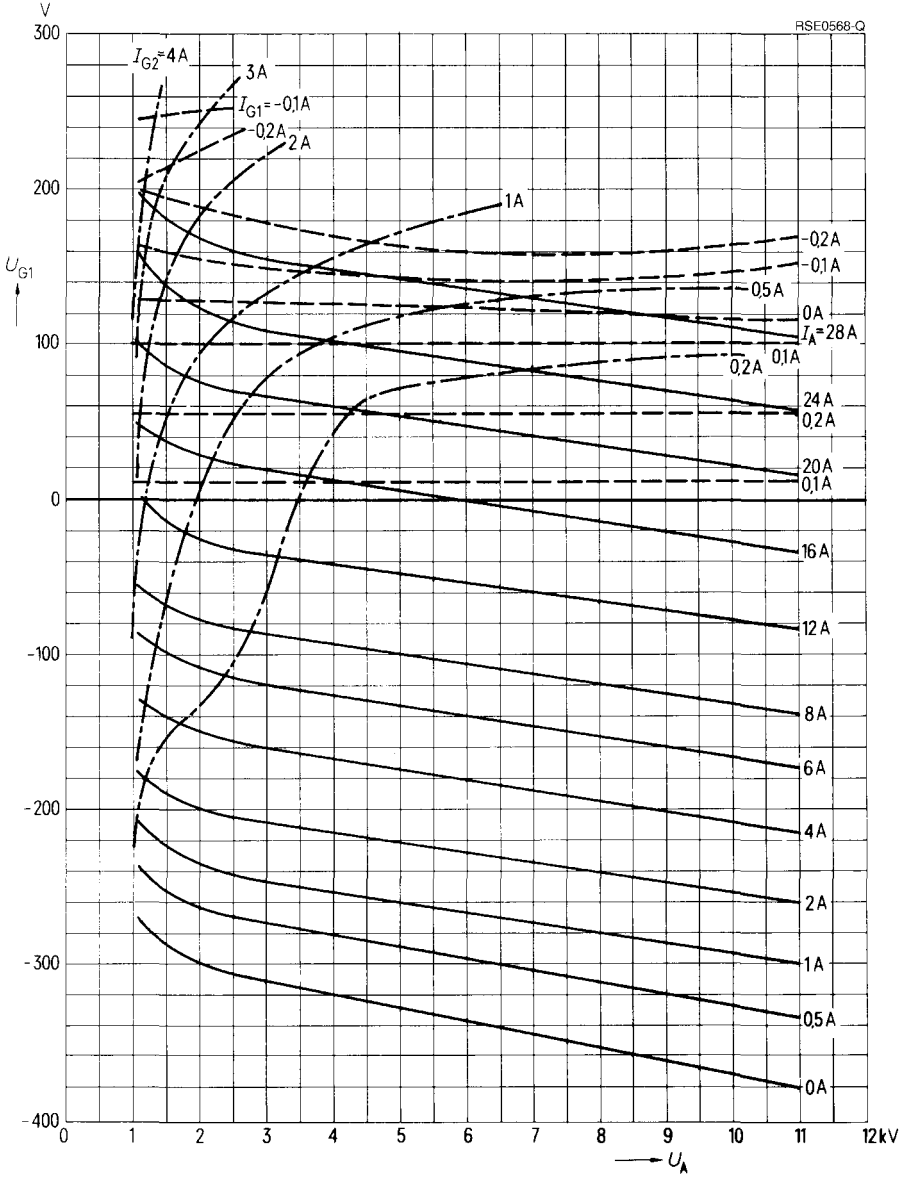
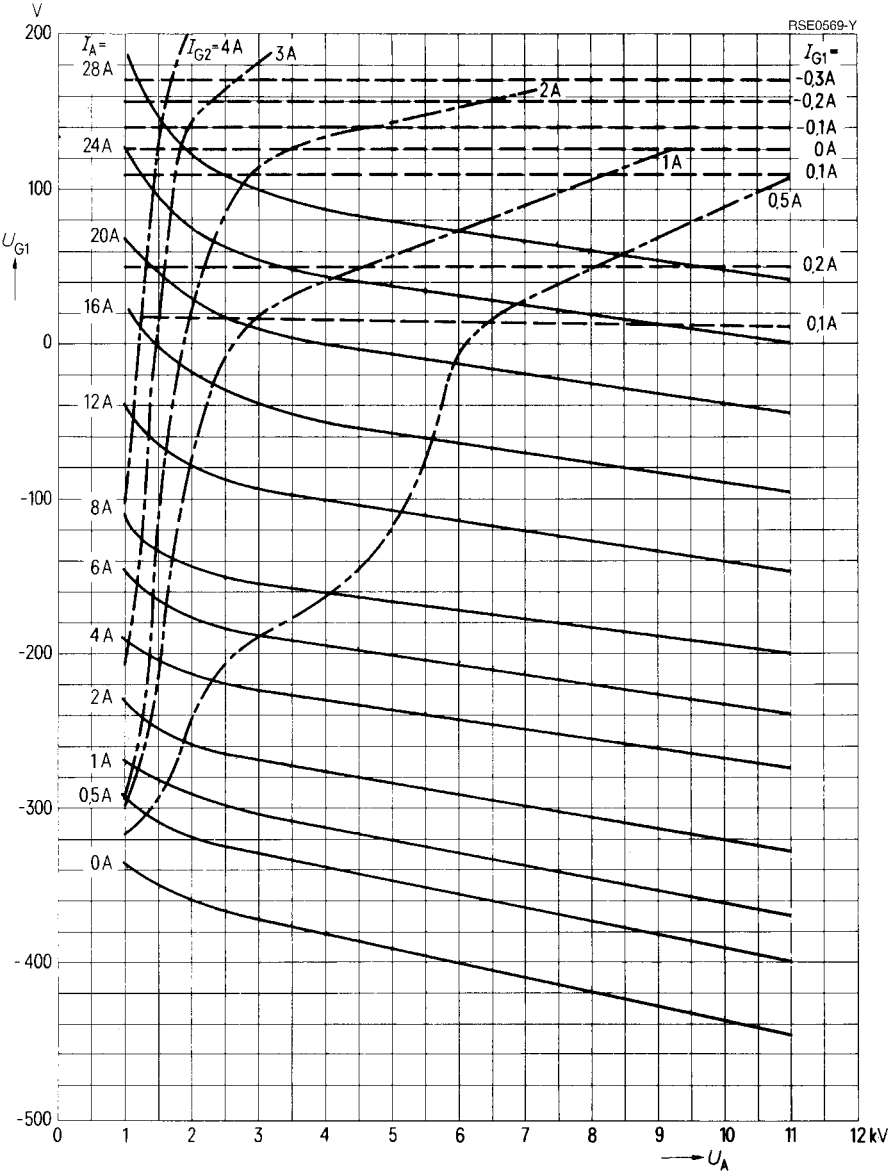
$U_{G1} = f(U_A)$ Parameter = I_A
$U_{G2} = 1500$ V Parameter = I_{G2}
Parameter = I_{G1}