R.F. POWER TETRODE

QY5-3000A

High-power forced air-cooled tetrode, rated for a maximum anode dissipation of 3 kW. Primarily intended for use in V.H.F. television transmitters.

PRELIMINARY DATA

This data should be read in conjunction with " Operating Notes Part 1—Power Valves " included in this volume of the Handbook.

FILAMENT

Thoriated tungsten.

V_f	6.3	V
I_f	32.5	A

CAPACITANCES

c_{in}	23.5	μμF
c_{out}	8.4	μμF
c_{a-g1}	<0.35	μμF

CHARACTERISTICS (measured at V_a=4.0 kV, I_a=2.0 A)

g_m	19	mA/V
μ_{g1-g2}	8.5	

COOLING

Max. temperature of seals	180	°C
Max. bulb temperature	250	°C

In order to keep within the temperature limits it may be necessary to direct a flow of air on to the seals.

The amount of forced-air cooling required for this valve depends upon the anode dissipation and the height above sea-level.

Typical values of input temperature, rate of flow of air and pressure difference between the inlet and outlet of the housing are given in the following table.

Anode Dissipation p_a (kW)	Height above sea-level h (m)	Input Temperature T_{in} (°C)	Rate of flow of air (m³/min)	Pressure difference between inlet and outlet (mm of H_2O)
1.0	0	35	1.8	10
1.0	0	45	2.2	15
1.0	1,500	35	2.2	13
1.0	3,000	25	2.3	13
2.5	0	35	4.5	60
2.5	0	45	5.4	85
2.5	1,500	35	5.4	73
2.5	3,000	25	5.8	75
3.0	0	35	5.7	95

QY5-3000A

R.F. POWER TETRODE

High-power forced air-cooled tetrode, rated for a maximum anode dissipation of 3 kW. Primarily intended for use in V.H.F. television transmitters.

OPERATION AS SINGLE VALVE R.F. POWER OSCILLATOR OR AMPLIFIER (CLASS "C" TELEGRAPHY)

Limiting Values

V_a max. (f <110 Mc/s)	5.0	kV
V_a max. (f <220 Mc/s)	4.0	kV
V_{g2} max.	800	V
$-V_{g1}$ max.	500	V
I_a max.	1.1	A
p_a max.	3.0	kW
p_{g2} max.	100	W
p_{g1} max.	30	W

Typical Operating Conditions

f	75	110	75	110	Mc/s
V_a	5	5	4	4.0	kV
V_{g2}	800	800	800	800	V
V_{g1}	−250	−250	−250	−250	V
I_a	1.1	1.1	1.1	1.1	A
I_{g2}	100	100	120	120	mA
I_{g1}	70	70	80	80	mA
$v_{in(pk)}$	480	480	500	500	V
P_{drive}	30	30	36	36	W
P_{out}	4.1	3.9	3.15	2.9	kW
η	74.5	71.5	72	69	%

OPERATION AS R.F. POWER AMPLIFIER (CLASS "C" ANODE AND SCREEN-GRID MODULATION). Screen-grid modulated through a choke of 60 H.

Limiting Values

V_a max. (f <110 Mc/s)	4.0	kV
V_a max. (f <220 Mc/s)	3.2	kV
V_{g2} max.	800	V
$-V_{g1}$ max.	500	V
I_a max.	900	mA
p_a max.	2.0	kW
*p_{g2} max.	100	W
p_{g1} max.	30	W

*For other methods of modulation, p_{g2} max. = 65 W.

Typical Operating Conditions

V_a	4.0	kV
V_{g2}	800	V
V_{g1}	−375	V
I_a	900	mA
I_{g2}	120	mA
I_{g1}	85	mA
$v_{in\ (pk)}$	625	V
P_{drive}	48	W
P_{out}	2.7	kW
η	75	%
For 100% modulation		
$P_{mod.}$	1.8	kW

R.F. POWER TETRODE

QY5-3000A

High-power forced air-cooled tetrode, rated for a maximum anode dissipation of 3 kW. Primarily intended for use in V.H.F. television transmitters.

OPERATION AS R.F. AMPLIFIER CLASS "C" GRID-MODULATION FOR TELEVISION SERVICE (with positive modulation and negative synchronisation).

Limiting Values

f max.	220	Mc/s
V_a max.	4.0	kV
V_{g2} max.	800	V
$-V_{g1}$ max.	500	V
I_a (peak white) max.	1.1	A
I_{g1} (peak white) max.	80	mA
P_{in} (peak white) max.	4.4	kW
p_a (peak white) max.	3.0	kW
p_{g2} (peak white) max.	100	W

Typical Operating Conditions for 2 Valves in Push-Pull

f	170–220	170–220	Mc/s
*Bandwidth (–1.5 db)	—	6.5	Mc/s
*Bandwidth (–3.0 db)	7.5	12	Mc/s
V_a	4.0	4.0	kV
V_{g2}	800	800	V
V_{g1} (peak white)	–230	–230	A
V_{g1} (black)	–380	–380	V
$v_{in\ (g1-g1)\ pk}$	850	850	V
I_a (peak white)	1.7	2.1	A
I_a (black)	0.5	0.6	A
I_{g2} (peak white)	80	50	mA
I_{g2} (black)	10	10	mA
I_{g1} (peak white)	25	50	mA
I_{g1} (black) (approx.)	0	0	mA
†P_{drive} (peak white)	200–300	300–400	W
P_{out} (peak white)	4.0	2.8	kW
P_{out} (black)	360	250	W
‡P_{load} (peak white)	2.8	1.96	kW

*Bandwidth based on a single LC circuit.

†Includes power dissipated in circuit and loading resistors.

‡With a circuit transfer efficiency of 70%.

OPERATION AS R.F. POWER AMPLIFIER CLASS "B" FOR TELEVISION SERVICE (with positive modulation and negative synchronisation).

Limiting Values

f max.	220	Mc/s
V_a max.	4.0	kV
V_{g2} max.	800	V
I_a (peak white) max.	1.1	A
I_{g1} (peak white) max.	80	mA
P_{in} (peak white) max.	4.4	kW
p_a (peak white) max.	3.0	kW
p_{g2} (peak white) max.	100	W

QY5-3000A

R.F. POWER TETRODE

High-power forced air-cooled tetrode, rated for a maximum anode dissipation of 3 kW
Primarily intended for use in V.H.F. television transmitters.

Typical Operating Conditions for 2 Valves in Push-Pull

f	170–220	Mc/s
*Bandwidth (–1.5 db)	6.5	Mc/s
*Bandwidth (–3.0 db)	12	Mc/s
V_a	4.0	kV
V_{g2}	800	V
V_{g1}	–150	V
$V_{in\ (g1-g1)(pk)}$ (peak white)	700	V
$V_{in\ (g1-g1)(pk)}$ (black)	350	V
I_a (peak white)	2.1	A
I_a (black)	0.6	A
I_{g2} (peak white)	50	mA
I_{g2} (black)	10	mA
I_{g1} (peak white)	50	mA
I_{g1} (black) (approx.)	0	mA
†P_{drive} (peak white)	200 to 300	W
P_{out} (peak white)	2.8	kW
P_{out} (black)	250	W
‡P_{load} (peak white)	1.96	kW

*Bandwidth based on a single LC circuit.

†Includes power dissipated in circuit and loading resistors.

‡With a circuit transfer efficiency of 70%.

OPERATION AS R.F. AMPLIFIER CLASS "C" GRID-MODULATION FOR TELEVISION SERVICE (with negative modulation and positive synchronisation).

Limiting Values

f max.	220	Mc/s
V_a max.	4.0	kV
V_{g2} max.	800	V
$-V_{g1}$ max.	500	V
I_a (sync.) max.	1.5	A
P_{in} (sync.) max.	6.0	kW
p_a (sync.) max.	3.0	kW
p_{g2} (sync.) max.	100	W
p_{g1} (sync.) max.	30	W

Typical Operating Conditions for 2 Valves in Push-Pull

f	170–220	170–220	Mc/s
*Bandwidth (–1.5 db)	6.5	—	Mc/s
*Bandwidth (–3 db)	12	7.5	Mc/s
V_a	4.0	4.0	kV
V_{g2}	800	800	V
V_{g1} (sync.)	–150	–150	V
V_{g1} (black)	–230	–230	V
V_{g1} (white)	–450	–450	V
$V_{in(g1-g1)pk}$	850	850	V
I_a (sync.)	2.75	2.75	A
I_a (black)	2.1	1.7	A
I_{g2} (sync.)	110	250	mA

(*continued*)

High-power forced air-cooled tetrode, rated for a maximum anode dissipation of 3 kW. Primarily intended for use in V.H.F. television transmitters.

Typical Operating Conditions for 2 Valves in Push-Pull (*contd.*)

I_{g2} (black)	50	80	mA
I_{g1} (sync.)	100	80	mA
I_{g1} (black)	50	25	mA
†P_{drive} (sync.)	300–400	200–300	W
P_{out} (sync.)	5.0	5.9	kW
P_{out} (black)	2.8	4.0	kW
‡P_{load} (sync.)	3.5	4.13	kW

*Bandwidth based on a single LC circuit.

†Includes power dissipated in circuit and loading resistors.

‡With a circuit transfer efficiency of 70%.

OPERATION AS R.F. AMPLIFIER CLASS "B" FOR TELEVISION SERVICE (with negative modulation and positive synchronisation).

Limiting Values

f max.	220	Mc/s
V_a max.	4.0	kV
V_{g2} max.	800	V
I_a (sync.) max.	1.5	A
P_{in} (sync.) max.	6.0	kW
p_a (sync.) max.	3.0	kW
p_{g2} (sync.) max.	100	W
p_{g1} (sync.) max.	30	W

Typical Operating Conditions for 2 Valves in Push-Pull

f	170–220	Mc/s
*Bandwidth (–1.5 db)	6.5	Mc/s
*Bandwidth (–3 db)	12	Mc/s
V_a	4.0	kV
V_{g2}	800	V
V_{g1}	–150	V
$v_{in(g1-g1)pk}$ (sync.)	850	V
$v_{in(g1-g1)pk}$ (black)	700	V
I_a (sync.)	2.75	A
I_a (black)	2.1	A
I_{g2} (sync.)	110	mA
I_{g2} (black)	50	mA
I_{g1} (sync.)	100	mA
I_{g1} (black)	50	mA
†P_{drive} (sync.)	300–400	W
P_{out} (sync.)	5.0	kW
P_{out} (black)	2.8	kW
‡P_{load} (sync.)	3.5	kW

*Bandwidth based on a single LC circuit.

†Includes power dissipated in circuit and loading resistors.

‡With a circuit transfer efficiency of 70%.

QY5-3000A

R.F. POWER TETRODE

High-power forced air-cooled tetrode, rated for a maximum anode dissipation of 3 kW. Primarily intended for use in V.H.F. television transmitters.

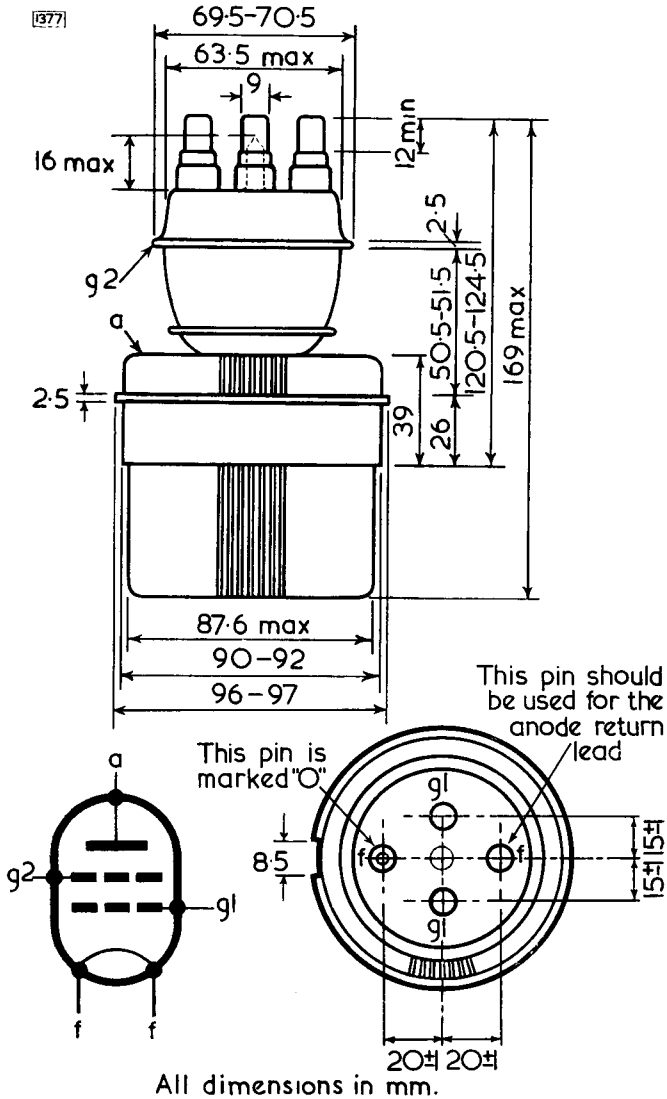

All dimensions in mm.

R.F. POWER TETRODE

QY5-3000A

High-power forced air-cooled tetrode, rated for a maximum anode dissipation of 3 kW. Primarily intended for use in V.H.F. television transmitters.

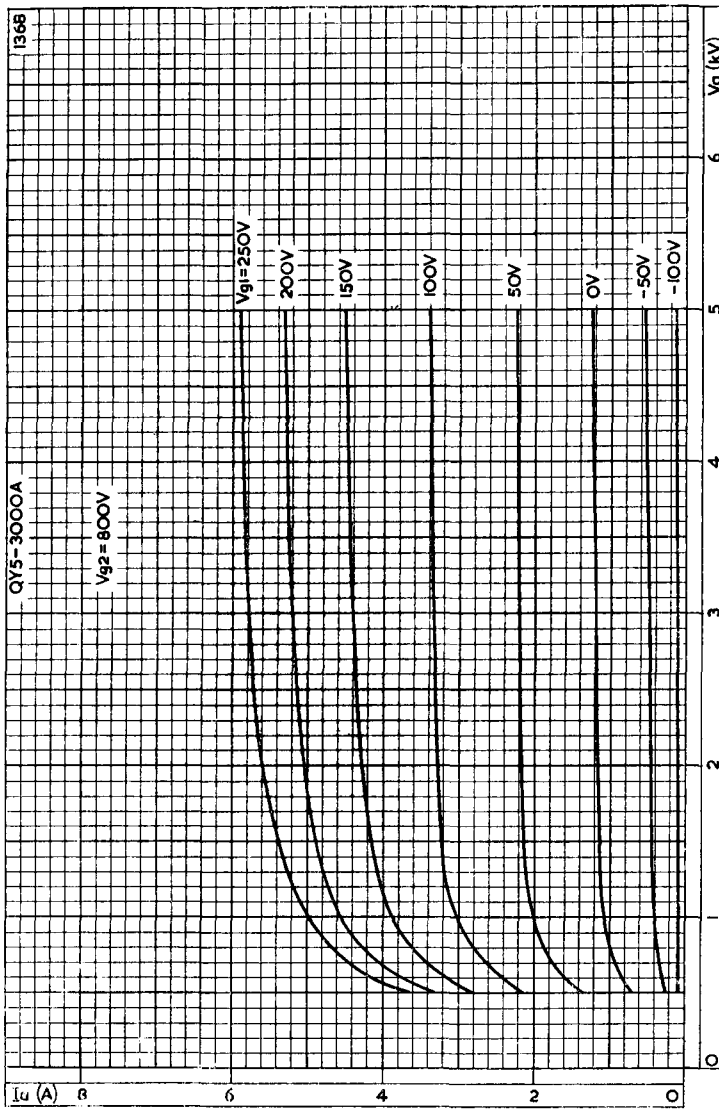

ANODE CURRENT PLOTTED AGAINST ANODE VOLTAGE WITH CONTROL-GRID VOLTAGE AS PARAMETER

QY5-3000A

R.F. POWER TETRODE

High-power forced air-cooled tetrode, rated for a maximum anode dissipation of 3 kW. Primarily intended for use in V.H.F. television transmitters.

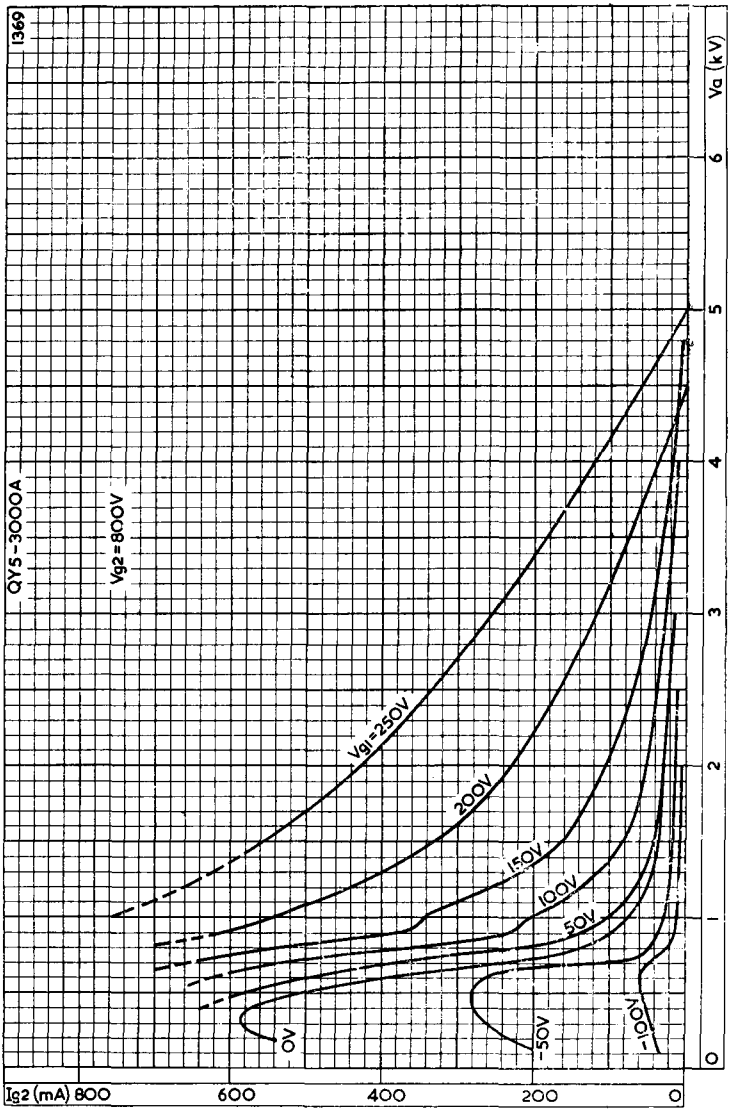

SCREEN-GRID CURRENT PLOTTED AGAINST ANODE VOLTAGE WITH CONTROL-GRID VOLTAGE AS PARAMETER

R.F. POWER TETRODE

QY5-3000A

High-power forced air-cooled tetrode, rated for a maximum anode dissipation of 3 kW. Primarily intended for use in V.H.F. television transmitters.

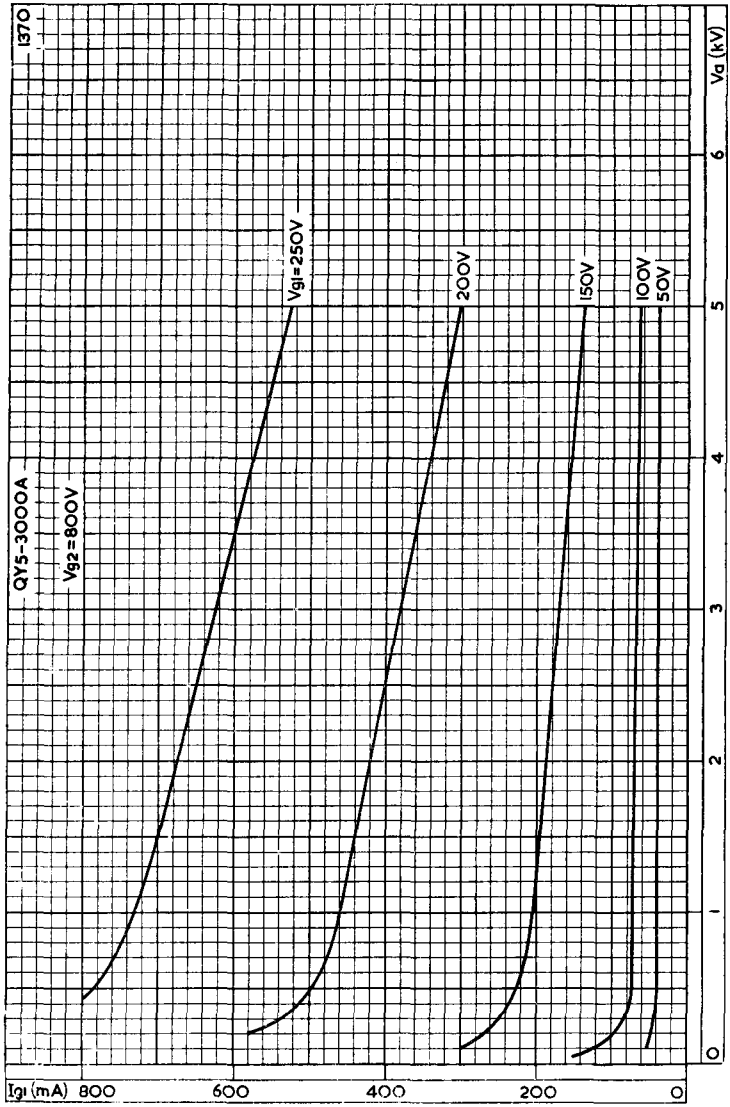

CONTROL-GRID CURRENT PLOTTED AGAINST ANODE VOLTAGE WITH CONTROL-GRID VOLTAGE AS PARAMETER

QY5-3000A

R.F. POWER TETRODE

High-power forced air-cooled tetrode, rated for a maximum anode dissipation of 3 kW. Primarily intended for use in V.H.F. television transmitters.

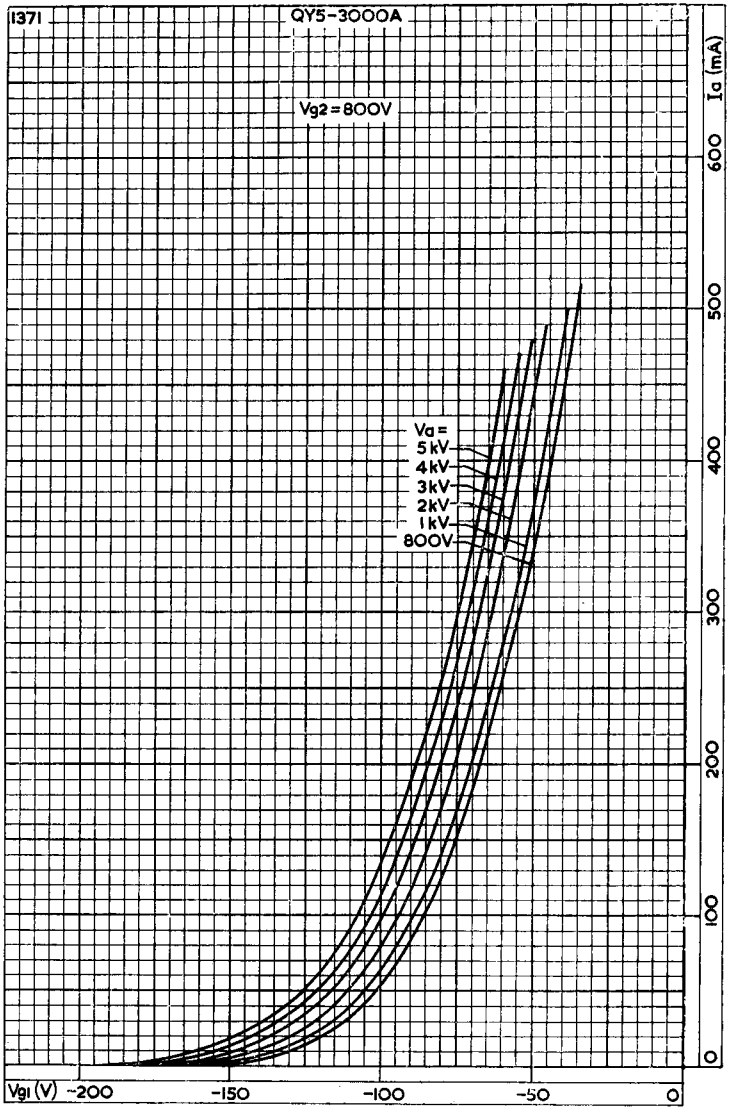

ANODE CURRENT PLOTTED AGAINST CONTROL-GRID VOLTAGE WITH ANODE VOLTAGE AS PARAMETER

R.F. POWER TETRODE

QY5-3000A

High-power forced air-cooled tetrode, rated for a maximum anode dissipation of 3 kW. Primarily intended for use in V.H.F. television transmitters.

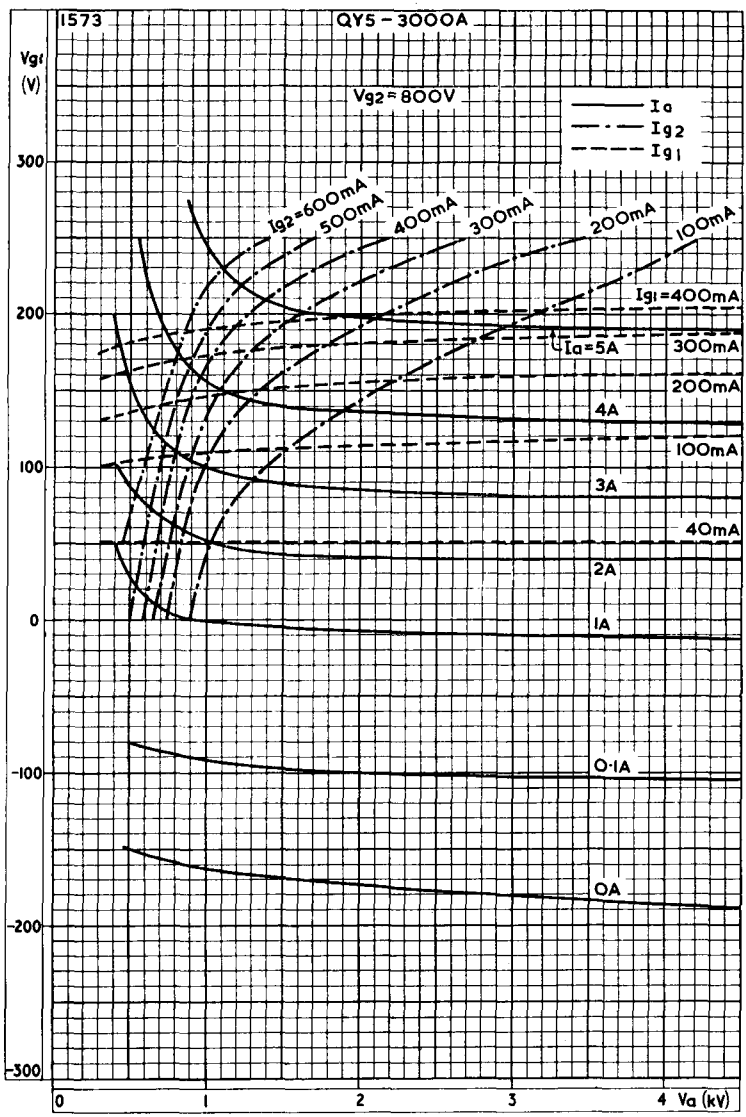

CONSTANT CURRENT CURVES

QY5-3000A

R.F. POWER TETRODE

High-power forced air-cooled tetrode, rated for a maximum anode dissipation of 3 kW. Primarily intended for use in V.H.F. television transmitters.

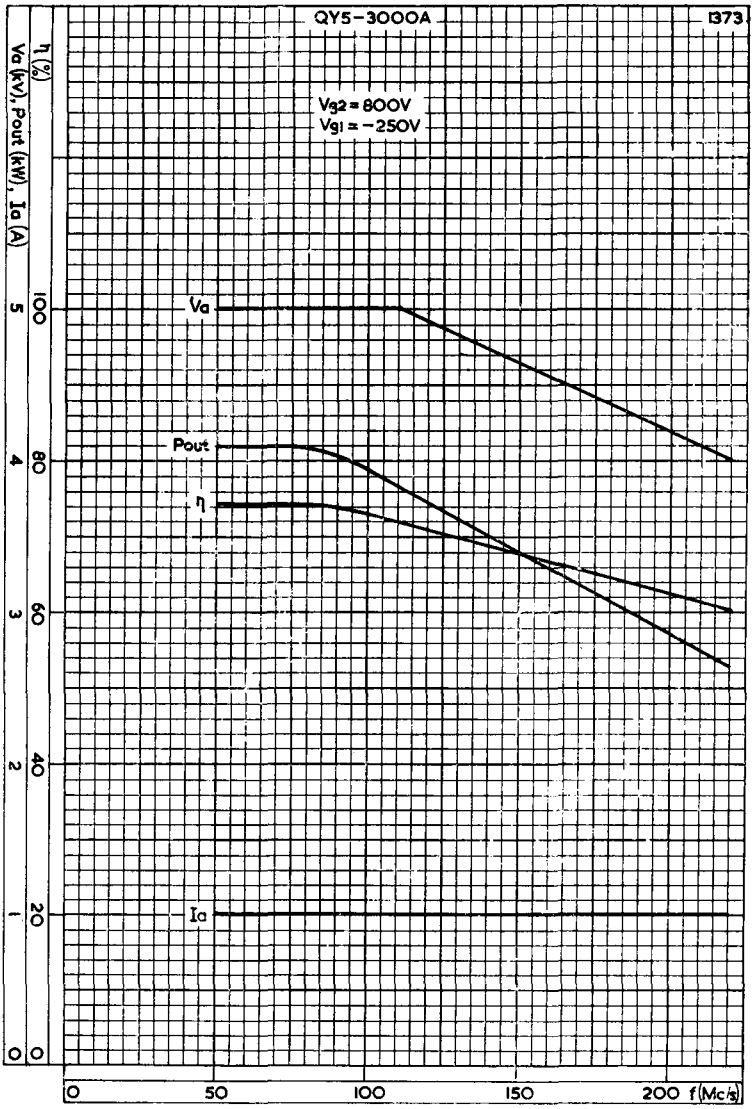

FREQUENCY CHARACTERISTICS.
SINGLE VALVE CLASS "C" TELEGRAPHY

R.F. POWER TETRODE

QY5-3000A

High-power forced air-cooled tetrode, rated for a maximum anode dissipation of 3 kW. Primarily intended for use in V.H.F. television transmitters.

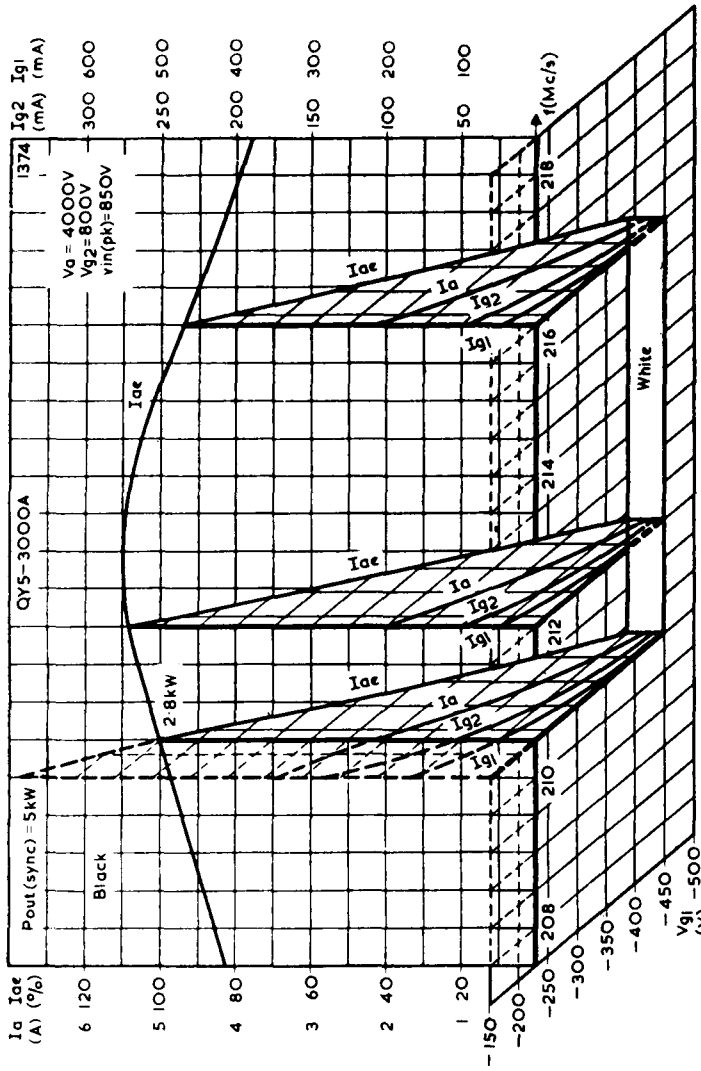

OPERATION OF TWO VALVES AS R.F. AMPLIFIER CLASS "C" GRID MODULATION FOR TELEVISION SERVICE, WITH NEGATIVE MODULATION AND POSITIVE SYNCHRONISATION

P_{out} (sync.) = 5.0 kW

QY5-3000A

R.F. POWER TETRODE

High-power forced air-cooled tetrode, rated for a maximum anode dissipation of 3 kW. Primarily intended for use in V.H.F. television transmitters.

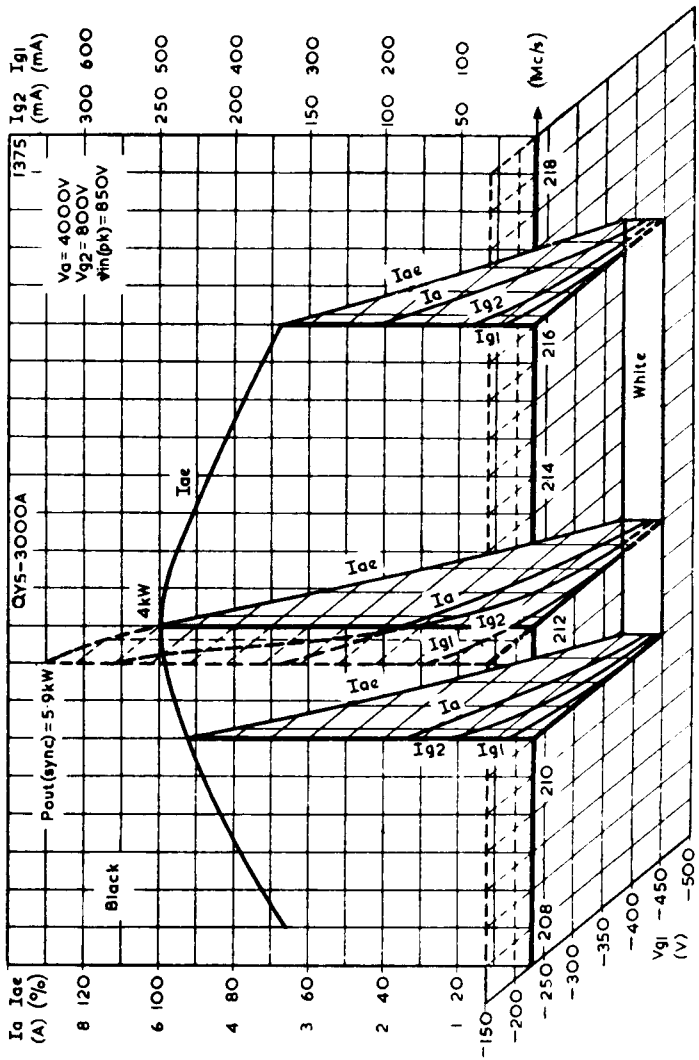

OPERATION OF TWO VALVES AS R.F. AMPLIFIER CLASS "C" GRID MODULATION FOR TELEVISION SERVICE, WITH NEGATIVE MODULATION AND POSITIVE SYNCHRONISATION

P_{out} (sync.) = 5.9 kW

R.F. POWER TETRODE

QY5-3000A

High-power forced air-cooled tetrode, rated for a maximum anode dissipation of 3 kW. Primarily intended for use in V.H.F. television transmitters.

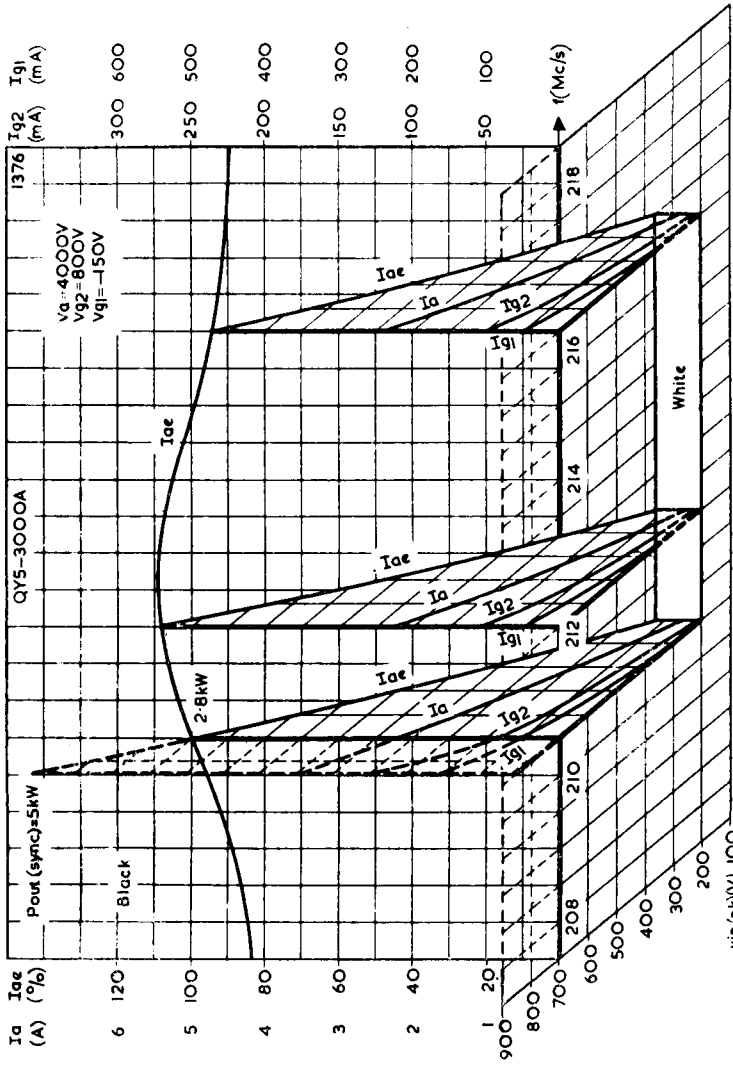

OPERATION OF TWO VALVES AS R.F. AMPLIFIER CLASS "B" FOR TELEVISION SERVICE, WITH NEGATIVE MODULATION AND POSITIVE SYNCHRONISATION

R.F. POWER TETRODE

QY5-3000W

High-power water-cooled tetrode, rated for a maximum anode dissipation of 3kW. Primarily intended for use in V.H.F. television transmitters.

PRELIMINARY DATA

This data should be read in conjunction with "Operating Notes Part 1—Power Valves" included in this volume of the Handbook.

FILAMENT Thoriated tungsten.

V_f	6.3	V
I_f	32.5	A

CAPACITANCES

c_{in}	23.5	μμF
c_{out}	8.4	μμF
c_{a-g1}	≤ 0.35	μμF

CHARACTERISTICS (Measured at V_a = 4.0 kV, I_a = 2.0 A.)

g_m	19	mA/V
μ_{g1-g2}	8.5	

COOLING

Max. temperature of seals	180	°C
Max. bulb temperature	250	°C

Typical values of input temperature, rate of flow of water and pressure difference between the inlet and outlet housing at various anode dissipations are given in the following table:—

Anode Dissipation p_a (kW)	Input Temperature T_{in} (°C)	Rate of flow of water (litres/min)	Pressure difference between inlet and outlet (atm)
1.0	20	2.5	0.073
1.0	50	3.0	0.1
2.0	20	2.5	0.073
2.0	50	4.8	0.25
3.0	20	3.0	0.105
3.0	50	6.9	0.55

In order to keep within the temperature limits it may be necessary to direct a flow of air on to the seals. Air cooling will in general not be necessary at frequencies ≤75 Mc/s and V_a≤4.0 kV (V_a ≤3.2 kV for class "C" anode and screen-grid modulation). At V_a≤5.0 kV (Va≤4.0 kV for class "C" anode and screen-grid modulation) air cooling will in general be necessary at all frequencies.

The characteristics, operating conditions and limiting values are identical with those given for QY5-3000A.

QY5-3000W

R.F. POWER TETRODE

High-power water-cooled tetrode, rated for a maximum anode dissipation of 3kW. Primarily intended for use in V.H.F. television transmitters.

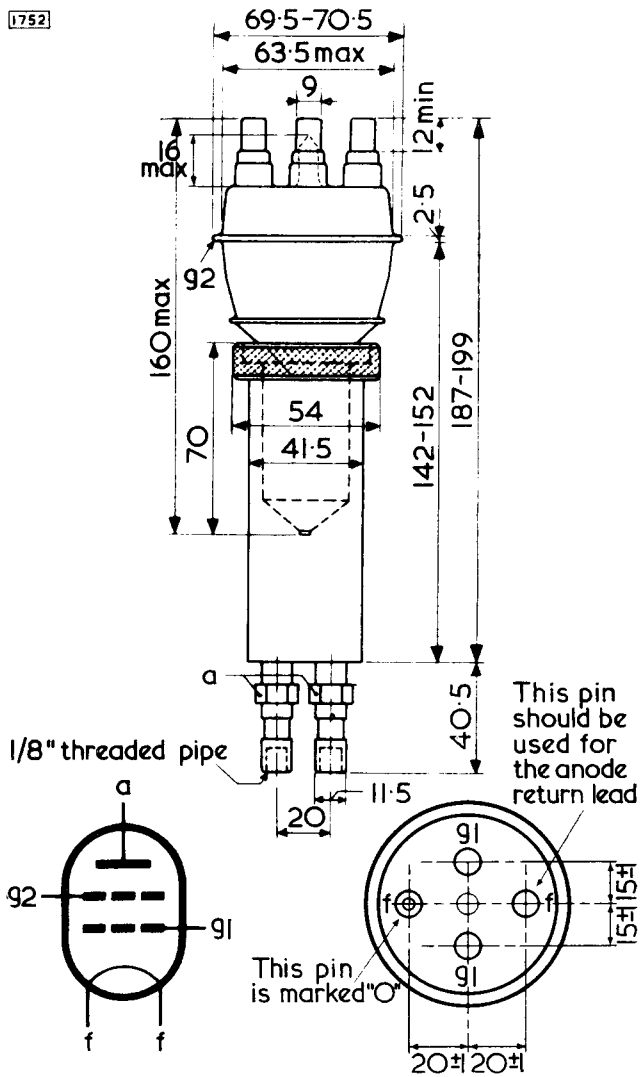

All dimensions in mm.

R.F. POWER TETRODE

QY5-3000A
QY5-3000W

QUICK REFERENCE DATA

Power tetrodes intended for use in V.H.F. television transmitters. The QY5-3000A is forced-air cooled, and the QY5-3000W water cooled.

	Class 'C' telegraphy	Class 'C' television	Class 'AB' S.S.B.	Class 'B' A.F.	
f max.	220	220	220	—	Mc/s
V_a max.	5.0	4.0	5.0	5.0	kV
p_a max.	3.0	3.0	3.0	3.0	kW
Performance					
f	75	220	30	—	Mc/s
P_{out}	4.1	4.0	1.57	9.5	kW

This data should be read in conjunction with GENERAL OPERATIONAL RECOMMENDATIONS—TRANSMITTING VALVES which precede this section of the handbook.

FILAMENT

Thoriated tungsten

V_f	6.3	V
I_f	32.5	A

CAPACITANCES

c_{in}	23.5	pF
c_{out}	8.4	pF
c_{a-g1}	$\leq$ 350	mpF

CHARACTERISTICS (measured at V_a = 4.0kV, I_a = 2.0A)

g_m	19	mA/V
μ_{g1-g2}	8.5	

COOLING

T_{seals} max.	180	°C
T_{bulb} max.	250	°C

QY5-3000A

In order to keep within the temperature limits it may be necessary to direct a flow of air on to the seals.
The amount of forced-air cooling required for this valve depends upon the anode dissipation and the height above sea-level.
Typical values of inlet temperature, rate of flow of air and pressure difference between the inlet and outlet of the housing are given in the following table.

Anode Dissipation	Height above sea-level		Inlet Temperature	Rate of flow of air per minute		Pressure difference between inlet and outlet	
p_a (kW)	h (m)	(ft)	T_{in} (°C)	(m^3)	(ft^3)	(mm H_2O)	(in H_2O)
1.0	0	0	35	1.8	63.6	10	0.39
1.0	0	0	45	2.2	74.2	15	0.59
1.0	1,500	4,921	35	2.2	74.2	13	0.51
1.0	3,000	9,842	25	2.3	81.2	13	0.51
2.5	0	0	35	4.5	158.9	60	2.36
2.5	0	0	45	5.4	190.7	85	3.35
2.5	1,500	4,921	35	5.4	190.7	73	2.87
2.5	3,000	9,842	25	5.8	204.8	75	2.95
3.0	0	0	35	5.7	201.3	95	3.74

QY5-3000W

Typical values of inlet temperature, rate of flow of water and pressure difference between the inlet and outlet housing at various anode dissipations are given in the following table:—

Anode Dissipation	Inlet Temperature	Rate of flow of water per minute		Pressure difference between inlet and outlet
p_a (kW)	T_{in} (°C)	(litres)	(gal)	(atm)
1.0	20	2.5	0.55	0.073
1.0	50	3.0	0.66	0.1
2.0	20	2.5	0.55	0.073
2.0	50	4.8	1.06	0.25
3.0	20	3.0	0.66	0.105
3.0	50	6.9	1.52	0.55

In order to keep within the temperature limits it may be necessary to direct a flow of air on to the seals. Air cooling will in general not be necessary at frequencies $\leqslant$75 Mc/s and $V_a \leqslant 4.0$ kV ($V_a \leqslant 3.2$ kV for class "C" anode and screen-grid modulation). At $V_a \leqslant 5.0$ kV ($V_a \leqslant 4.0$ kV for class "C" anode and screen-grid modulation) air cooling will in general be necessary at all frequencies.

CLASS "C" TELEGRAPHY OR F.M. TELEPHONY

Absolute maximum ratings

V_a max. (f < 110Mc/s)	5.0	kV
V_a max. (f < 220Mc/s)	4.0	kV
V_{g2} max.	800	V
$-V_{g1}$ max.	500	V
I_a max.	1.1	A
p_a max.	3.0	kW
p_{g2} max.	100	W
p_{g1} max.	30	W

Typical operating conditions

f	75	110	75	110	Mc/s
V_a	5.0	5.0	4.0	4.0	kV
V_{g2}	800	800	800	800	V
V_{g1}	−250	−250	−250	−250	V
I_a	1.1	1.1	1.1	1.1	A
I_{g2}	100	100	120	120	mA
I_{g1}	70	70	80	80	mA
$v_{in(pk)}$	480	480	500	500	V
P_{drive}	30	30	36	36	W
P_{out}	4.1	3.9	3.15	2.9	kW
η_a	74.5	71.5	72	69	%

CLASS "C" ANODE AND SCREEN-GRID MODULATION

Screen-grid modulated through a choke of 60H

Absolute maximum ratings

Carrier condition for a modulation factor of 1.

V_a max. (f < 110Mc/s)	4.0	kV
V_a max. (f < 220Mc/s)	3.2	kV
V_{g2} max.	800	V
$-V_{g1}$ max.	500	V
I_a max.	900	mA
p_a max.	2.0	kW
*p_{g2} max.	100	W
p_{g1} max.	30	W

*For other methods of modulation, P_{g2} max. = 65W.

Typical operating conditions

V_a	4.0	kV
V_{g2}	800	V
V_{g1}	−375	V
I_a	900	mA
I_{g2}	120	mA
I_{g1}	85	mA
$v_{in(pk)}$	625	V
P_{drive}	48	W
P_{out}	2.7	kW
η_a	75	%
For 100% modulation		
$P_{mod.}$	1.8	kW

QY5-3000A
QY5-3000W

R.F. POWER TETRODE

CLASS "C" GRID-MODULATION FOR TELEVISION SERVICE

(with positive modulation and negative synchronisation)

Absolute maximum ratings

f max.	220	Mc/s
V_a max.	4.0	kV
V_{g2} max.	800	V
$-V_{g1}$ max.	500	V
I_a (peak white) max.	1.1	A
I_{g1} (peak white) max.	80	mA
P_{in} (peak white) max.	4.4	kW
p_a (peak white) max.	3.0	kW
p_{g2} (peak white) max.	100	W

Typical operating conditions for 2 valves in push-pull

f	170–220	170–220	Mc/s
*Bandwidth (–1.5db)	—	6.5	Mc/s
*Bandwidth (–3.0db)	7.5	12	Mc/s
V_a	4.0	4.0	kV
V_{g2}	800	800	V
V_{g1} (peak white)	–230	–230	V
V_{g1} (black)	–380	–380	V
$V_{in(g1-g1)pk}$	850	850	V
I_a (peak white)	1.7	2.1	A
I_a (black)	0.5	0.6	A
I_{g2} (peak white)	80	50	mA
I_{g2} (black)	10	10	mA
I_{g1} (peak white)	25	50	mA
I_{g1} (black) approx.	0	0	mA
†P_{drive} (peak white)	200–300	300–400	W
P_{out} (peak white)	4.0	2.8	kW
P_{out} (black)	360	250	W
‡P_{load} (peak white)	2.8	1.96	kW

*Bandwidth based on a single LC circuit.

†Includes power dissipated in circuit and loading resistors.

‡With a circuit transfer efficiency of 70%.

QY5-3000A
QY5-3000W

CLASS "B" FOR TELEVISION SERVICE

(with positive modulation and negative synchronisation)

Absolute maximum ratings

f max.	220	Mc/s
V_a max.	4.0	kV
V_{g2} max.	800	V
I_a (peak white) max.	1.1	A
I_{g1} (peak white) max.	80	mA
P_{in} (peak white) max.	4.4	kW
p_a (peak white) max.	3.0	kW
p_{g2} (peak white) max.	100	W

Typical operating conditions for 2 valves in push-pull

f	170–220	Mc/s
*Bandwidth (–1.5 db)	6.5	Mc/s
*Bandwidth (–3.0 db)	12	Mc/s
V_a	4.0	kV
V_{g2}	800	V
V_{g1}	–150	V
$V_{in(g1-g1)(pk)}$ (peak white)	700	V
$v_{in(g1-g1)(pk)}$ (black)	350	V
I_a (peak white)	2.1	A
I_a (black)	0.6	A
I_{g2} (peak white)	50	mA
I_{g2} (black)	10	mA
I_{g1} (peak white)	50	mA
I_{g1} (black) (approx.)	0	mA
†P_{drive} (peak white)	200 to 300	W
P_{out} (peak white)	2.8	kW
P_{out} (black)	250	W
‡P_{load} (peak white)	1.96	kW

*Bandwidth based on a single LC circuit.

†Includes power dissipated in circuit and loading resistors.

‡With a circuit transfer efficiency of 70%.

QY5-3000A
QY5-3000W

R.F. POWER TETRODE

CLASS "C" GRID-MODULATION FOR TELEVISION SERVICE

(with negative modulation and positive synchronisation)

Absolute maximum ratings

f max.	220	Mc/s
V_a max.	4.0	kV
V_{g2} max.	800	V
$-V_{g1}$ max.	500	V
I_a (sync.) max.	1.5	A
P_{in} (sync.) max.	6.0	kW
p_a (sync.) max.	3.0	kW
p_{g2} (sync.) max.	100	W
p_{g1} (sync.) max.	30	W

Typical operating conditions for 2 valves in push-pull

f	170–220	170–220	Mc/s
*Bandwidth (–1.5 db)	6.5	—	Mc/s
*Bandwidth (–3 db)	12	7.5	Mc/s
V_a	4.0	4.0	kV
V_{g2}	800	800	V
V_{g1} (sync.)	–150	–150	V
V_{g1} (black)	–230	–230	V
V_{g1} (white)	–450	–450	V
$v_{in(g1-g1)pk}$	850	850	V
I_a (sync.)	2.75	2.75	A
I_a (black)	2.1	1.7	A
I_{g2} (sync.)	110	250	mA
I_{g2} (black)	50	80	mA
I_{g1} (sync.)	100	80	mA
I_{g1} (black)	50	25	mA
†P_{drive} (sync.)	300–400	200–300	W
P_{out} (sync.)	5.0	5.9	kW
P_{out} (black)	2.8	4.0	kW
‡P_{load} (sync.)	3.5	4.13	kW

*Bandwidth based on a single LC circuit.

†Includes power dissipated in circuit and loading resistors.

‡With a circuit transfer efficiency of 70%.

QY5-3000A
QY5-3000W

CLASS "B" FOR TELEVISION SERVICE

(with negative modulation and positive synchronisation)

Absolute maximum ratings

f max.	220	Mc/s
V_a max.	4.0	kV
V_{g2} max.	800	V
I_a (sync.) max.	1.5	A
P_{in} (sync.) max.	6.0	kW
p_a (sync.) max.	3.0	kW
p_{g2} (sync.) max.	100	W
p_{g1} (sync.) max.	30	W

Typical operating conditions for 2 valves in push-pull

f	170–220	Mc/s
*Bandwidth (–1.5 db)	6.5	Mc/s
*Bandwidth (–3 db)	12	Mc/s
V_a	4.0	kV
V_{g2}	800	V
V_{g1}	–150	V
$v_{in(g1-g1)pk}$ (sync.)	850	V
$v_{in(g1-g1)pk}$ (black)	700	V
I_a (sync.)	2.75	A
I_a (black)	2.1	A
I_{g2} (sync.)	110	mA
I_{g2} (black)	50	mA
I_{g1} (sync.)	100	mA
I_{g1} (black)	50	mA
†P_{drive} (sync.)	300–400	W
P_{out} (sync.)	5.0	kW
P_{out} (black)	2.8	kW
‡P_{load} (sync.)	3.5	kW

*Bandwidth based on a single LC circuit.

†Includes power dissipated in circuit and loading resistors.

‡With a circuit transfer efficiency of 70%.

QY5-3000A
QY5-3000W

R.F. POWER TETRODE

CLASS "AB" SINGLE SIDEBAND SUPPRESSED CARRIER

Absolute maximum ratings

f max.	200	Mc/s
V_a max.	5.0	kV
V_{g2} max.	1.0	kV
p_a max.	3.0	kW
p_{g2} max.	100	W
I_k max.	1.2	A
$i_{k(pk)}$ max.	3.8	A
$-V_{g1}$ max.	500	V

Typical operating conditions

Envelope peak to average $\geqslant 1$ and < 2

f	30	30	30	Mc/s
V_a	5.0	5.0	5.0	kV
V_{g2}	1.0	1.0	1.0	kV
$*V_{g1}$	–120	–117	–85	V
$I_{a(o)}$	200	200	500	mA

"Single tone" modulation, maximum signal conditions

I_a	474	505	640	mA
I_{g2}	20	70	15	mA
I_{g1}	0	20	0	mA
$v_{in(pk)}$	120	134	85	V
$P_{load(driver)}$	3.0	5.0	3.0	W
p_a	1.02	0.96	1.82	kW
p_{g2}	20	70	15	W
P_{out}	1.35	1.57	1.38	kW
η_a	57	63	43	%
P_{load}	1.15	1.34	1.17	kW

"Two tone" modulation, maximum signal conditions

I_a	351	380	576	mA
I_{g2}	8.5	25	7.0	mA
I_{g1}	0	1.5	0	mA
$v_{in(pk)}$	120	134	85	V
$P_{load(driver)}$	1.5	2.5	1.5	W
p_a	1.08	1.12	2.19	kW
p_{g2}	8.5	25	7.0	W
$P.E.P_{out}$	1.35	1.57	1.38	kW
P_{out} (mean)	675	785	690	W
η_a	38	41	24	%
$P.E.P_{(load)}$	1.15	1.34	1.17	kW
$\dagger D_{i.m.}$	33	30	42	dB

$*V_{g1}$ is set to give the $I_{a(o)}$ and will vary slightly from valve to valve.

†The voltage amplitude of all intermodulation products are below this level, which is referred to the amplitude of either of the two tone frequencies. Relative to the peak envelope power these figures will be increased by 6dB. The figures are measured at full drive.

QY5-3000A
QY5-3000W

CLASS "B" A.F.

Absolute maximum ratings

V_a max.	5.0	kV
V_{g2} max.	800	V
I_k max.	1.7	A
$i_{k(pk)}$ max.	5.3	A
p_a max.	3.0	kW
p_{g2} max.	100	W
p_{g1} max.	30	W

Typical operating conditions for 2 valves in push-pull

V_a	5.0	5.0	4.0	4.0	kV
V_{g2}	800	800	800	800	V
V_{g1}	−107	−107	−103	−93	V
$I_{a(o)}$	2 × 100	2 × 100	2 × 100	2 × 150	mA
I_a (max. sig.)	2 × 1.1	2 × 1.46	2 × 0.6	2 × 1.37	A
I_{g2} (max. sig.)	2 × 50	2 × 120	2 × 60	2 × 75	mA
I_{g1}	2 × 40	2 × 150	2 × 11	2 × 84	mA
$V_{in(g1-g1)r.m.s.}$	420	505	259	414	V
P_{drive}	2 × 11	2 × 50	2 × 2.0	2 × 40	W
p_a	2 × 1.9	2 × 2.55	2 × 0.9	2 × 2.36	kW
η_a	65	65	62	57	%
R_{a-a}	5.0	3.7	7.0	3.43	kΩ
P_{out}	7.2	9.5	3.0	6.25	kW

ACCESSORIES

Filament and control grid clips	40634
Screen grid connector	40622
Insulating pedestal (QY5-3000A)	40635
Water jacket (QY5-3000W)	K713

PHYSICAL DATA

	QY5-3000A	QY5-3000W	
Weight of valve	4.96	0.77	lb
	2.25	0.35	kg
Weight of valve plus carton	12.6	2.4	lb
	5.7	1.1	kg

QY5-3000A
QY5-3000W

CLASS "B" A.F.

Absolute maximum ratings

V_a max.	5.0	kV
V_{g2} max.	800	V
I_k max.	1.7	A
$i_{k(pk)}$ max.	5.3	A
p_a max.	3.0	kW
p_{g2} max.	100	W
p_{g1} max.	30	W

Typical operating conditions for 2 valves in push-pull

V_a	5.0	5.0	4.0	4.0	kV
V_{g2}	800	800	800	800	V
V_{g1}	–107	–107	–103	–93	V
$I_{a(o)}$	2×100	2×100	2×100	2×150	mA
I_a (max. sig.)	2×1.1	2×1.46	2×0.6	2×1.37	A
I_{g2} (max. sig.)	2×50	2×120	2×60	2×75	mA
I_{g1}	2×40	2×150	2×11	2×84	mA
$V_{in(g1-g1)r.m.s.}$	420	505	259	414	V
P_{drive}	2×11	2×50	2×2.0	2×40	W
p_a	2×1.9	2×2.55	2×0.9	2×2.36	kW
η_a	65	65	62	57	%
R_{a-a}	5.0	3.7	7.0	3.43	kΩ
P_{out}	7.2	9.5	3.0	6.25	kW

ACCESSORIES

Filament and control grid clips	40634
Screen grid connector	40622
Insulating pedestal (QY5-3000A)	40635
Water jacket (QY5-3000W)	K713

PHYSICAL DATA

	QY5-3000A	QY5-3000W	
Weight of valve	4.96	0.77	lb
	2.25	0.35	kg
Weight of valve plus carton	12.6	2.4	lb
	5.7	1.1	kg

QY5-3000A
QY5-3000W

R.F. POWER TETRODE

OUTLINE DRAWING OF QY5-3000A

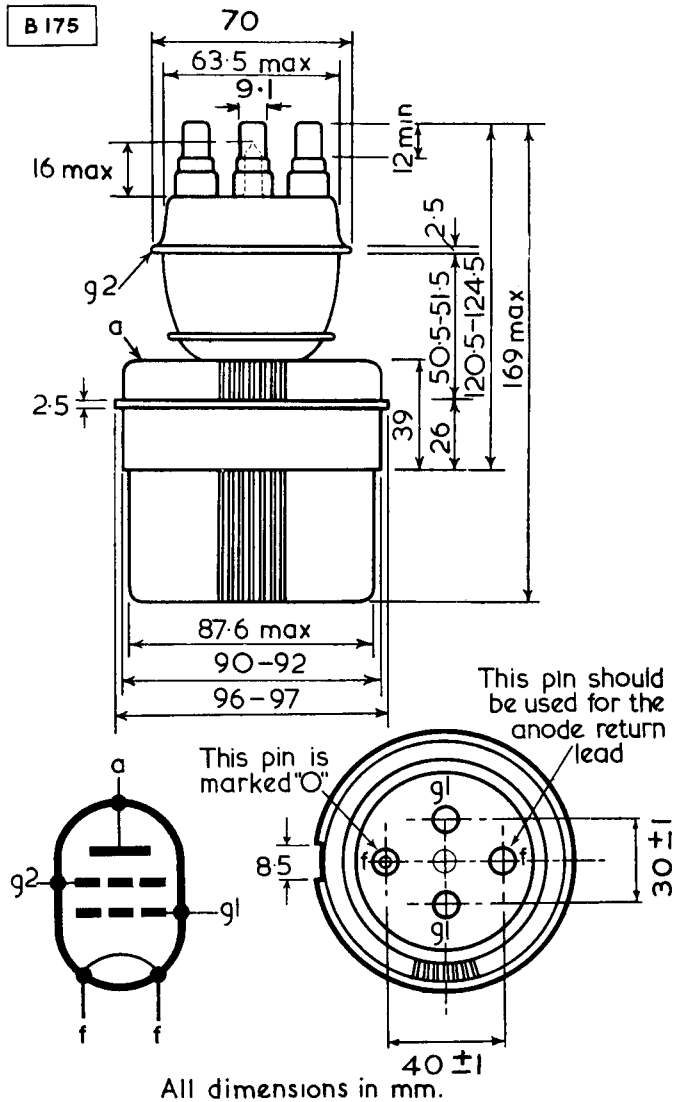

All dimensions in mm.

QY5-3000A
QY5-3000W

R.F. POWER TETRODE

OUTLINE DRAWING OF QY5-3000A

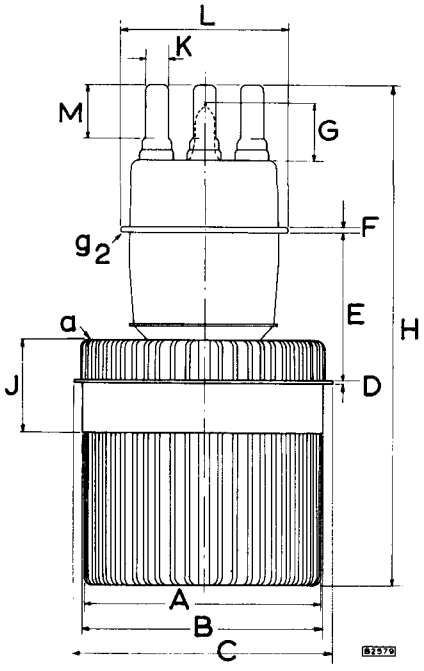

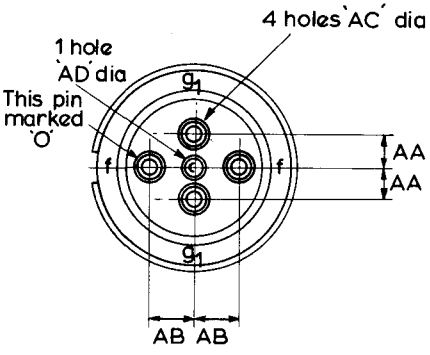

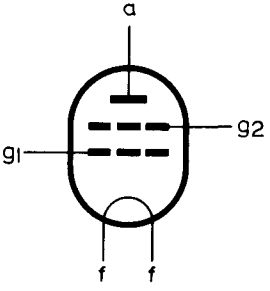

QY5-3000A
QY5-3000W

OUTLINE DRAWING OF QY5-3000W

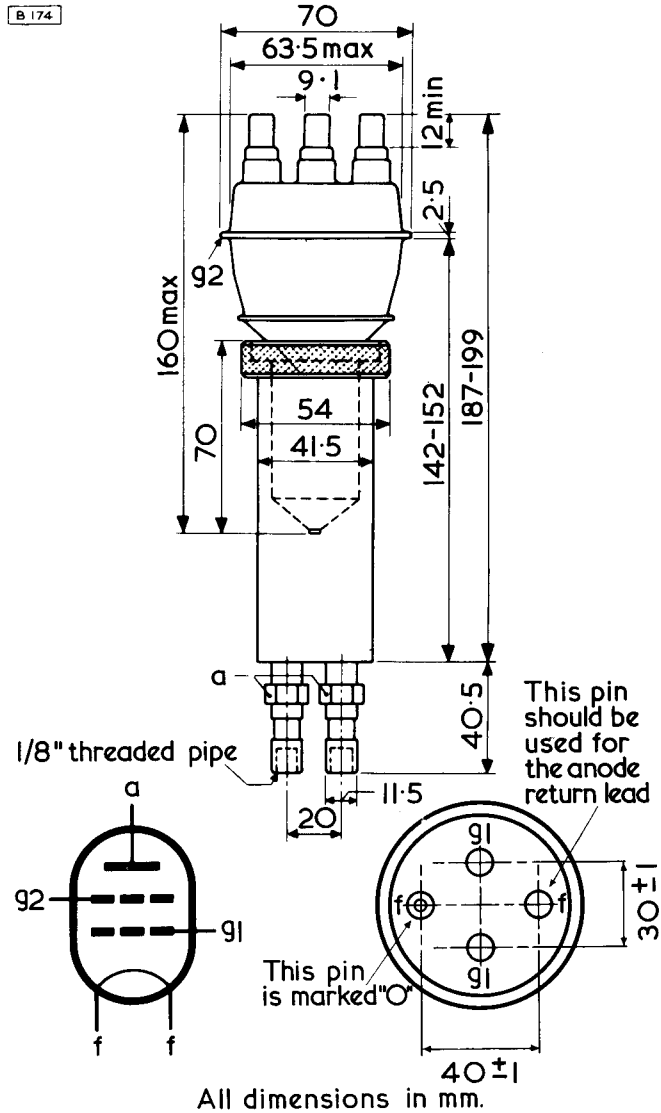

All dimensions in mm.

DIMENSIONS

	Inches	*Millimetres*	
A	3.445	87.5	max
B	3.583 ± 0.031	91 ± 0.8	
C	3.799 ± 0.015	96.5 ± 0.4	
D	0.098 ± 0.020	2.5 ± 0.5	
E	2.008 ± 0.015	51 ± 0.4	
F	0.098 ± 0.020	2.5 ± 0.5	
G	0.630	16	max
H	6.614	168	max
J	1.535 ± 0.039	39 ± 1.0	
K	0.354 ± 0.004	9.0 ± 0.1	
L	2.756 ± 0.015	70 ± 0.4	
M	0.394	10	min
AA	0.591 ± 0.002	15 ± 0.05	
AB	0.787 ± 0.002	20 ± 0.05	
AC	0.394 ± 0.002	10 ± 0.05	
AD	0.295 ± 0.002	7.5 ± 0.5	

Inch dimensions derived from original millimetre dimensions.

QY5-3000A
QY5-3000W

R.F. POWER TETRODE

OUTLINE DRAWING OF QY5-3000W

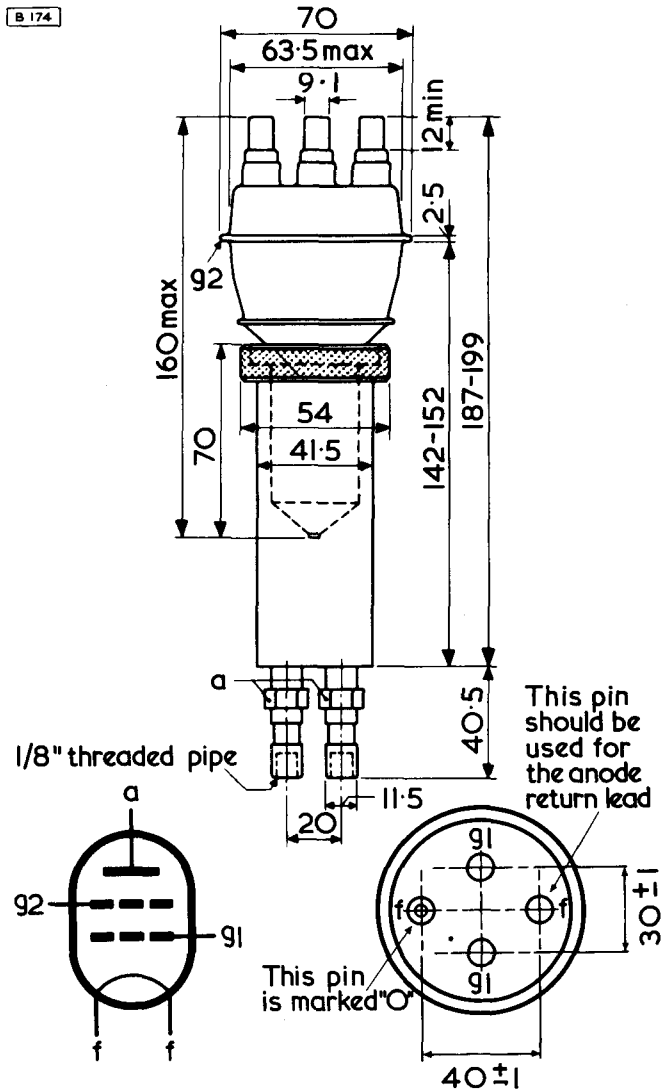

All dimensions in mm.

QY5-3000A
QY5-3000W

ANODE CURRENT PLOTTED AGAINST ANODE VOLTAGE WITH CONTROL-GRID VOLTAGE AS PARAMETER

QY5-3000A
QY5-3000W

R.F. POWER TETRODE

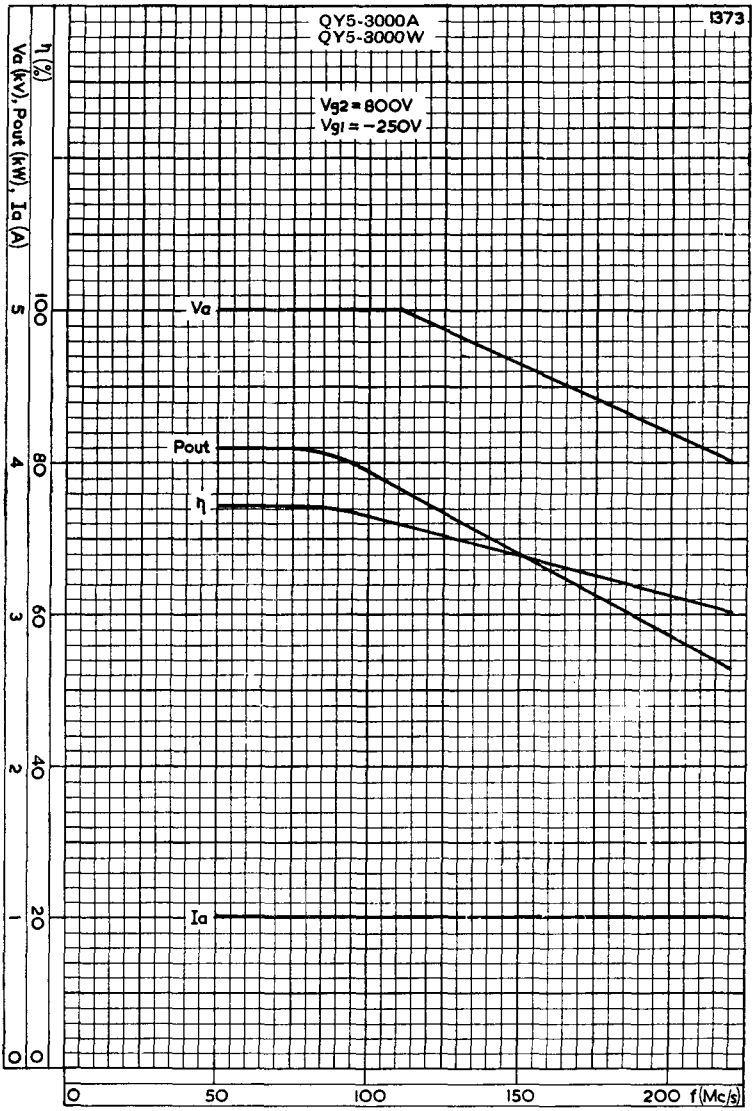

FREQUENCY CHARACTERISTICS.
SINGLE VALVE CLASS "C" TELEGRAPHY

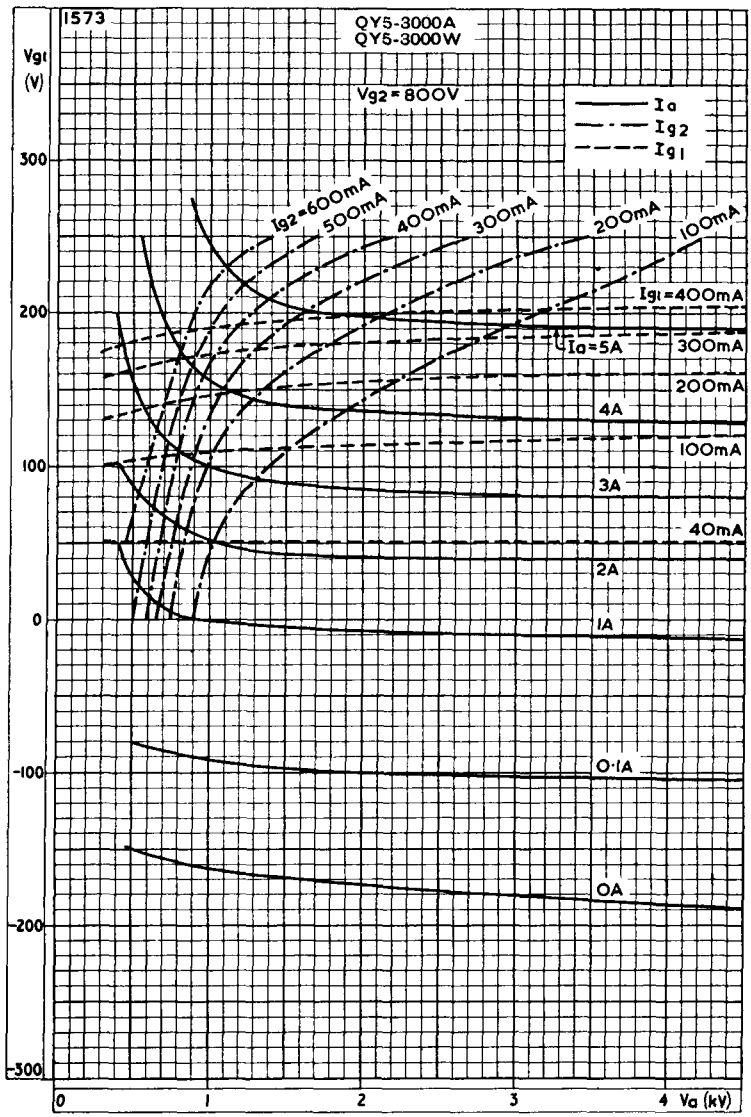

CONSTANT CURRENT CURVES

QY5-3000A
QY5-3000W

R.F. POWER TETRODE

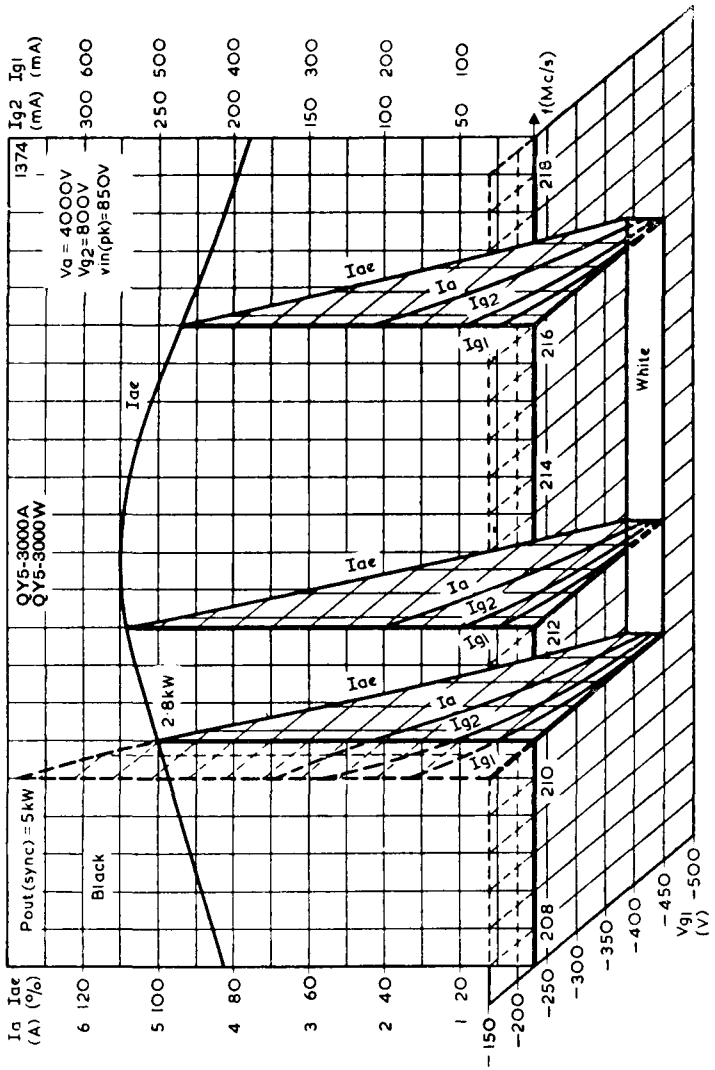

OPERATION OF TWO VALVES AS R.F. AMPLIFIER CLASS "C" GRID MODULATION FOR TELEVISION SERVICE, WITH NEGATIVE MODULATION AND POSITIVE SYNCHRONISATION

P_{out} (sync.) = 5.0kW

QY5-3000A
QY5-3000W

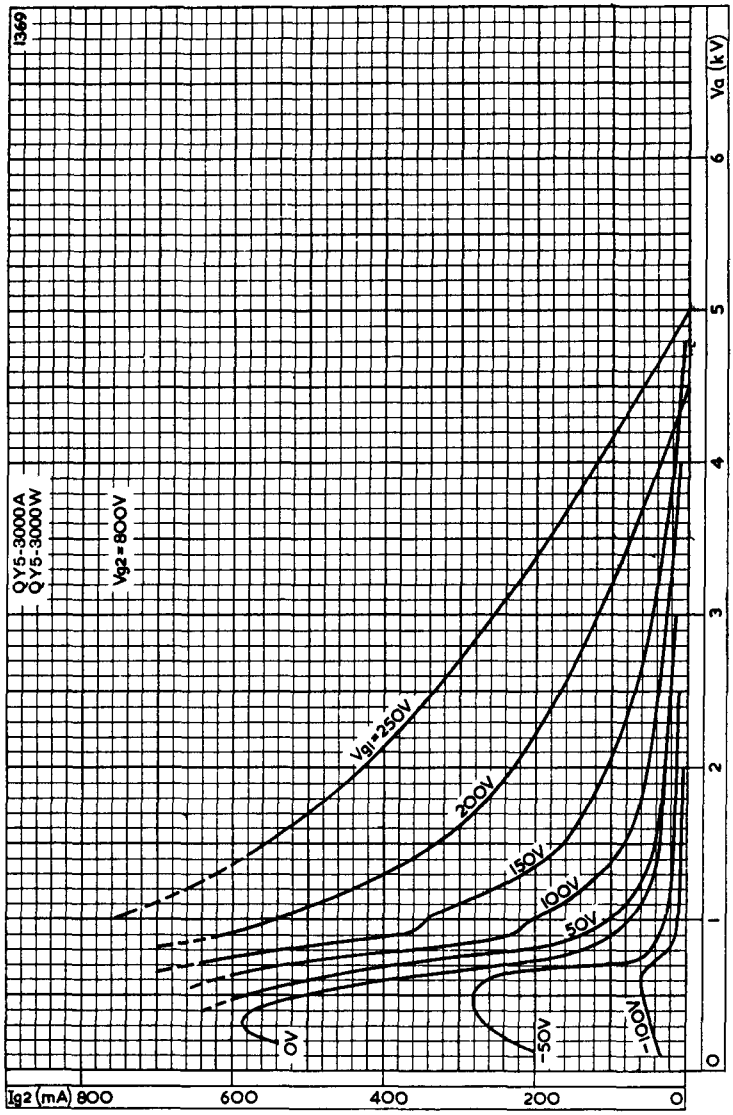

SCREEN-GRID CURRENT PLOTTED AGAINST ANODE VOLTAGE WITH CONTROL-GRID VOLTAGE AS PARAMETER

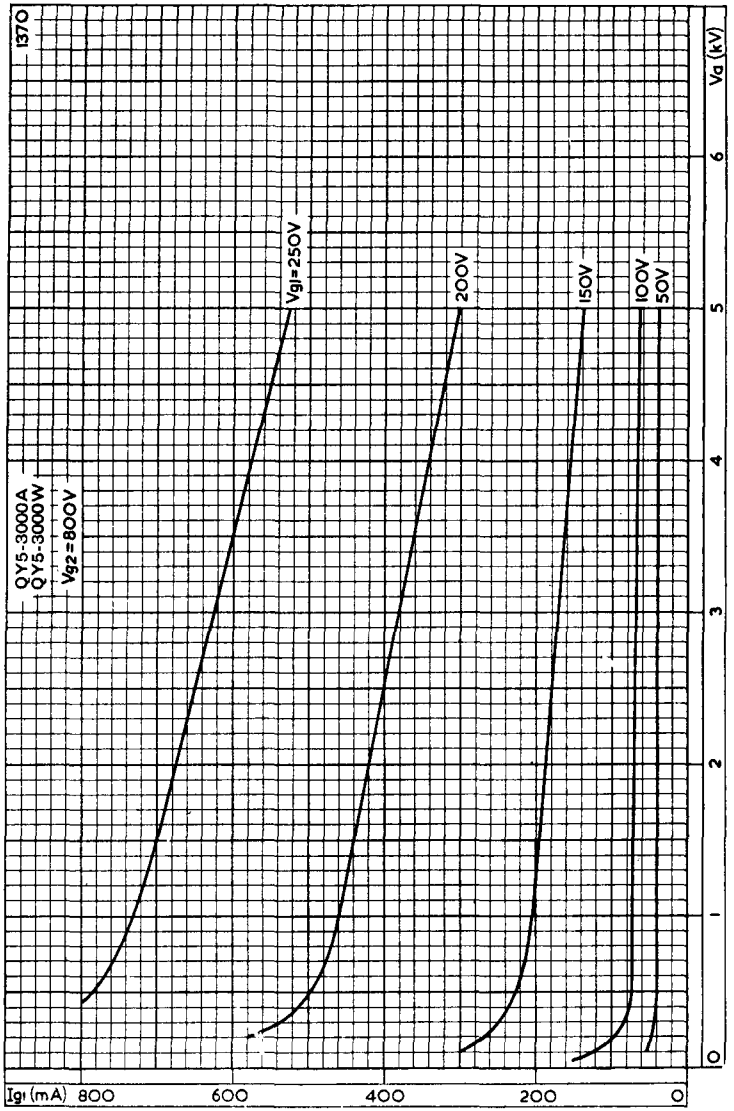

CONTROL-GRID CURRENT PLOTTED AGAINST ANODE VOLTAGE
WITH CONTROL-GRID VOLTAGE AS PARAMETER

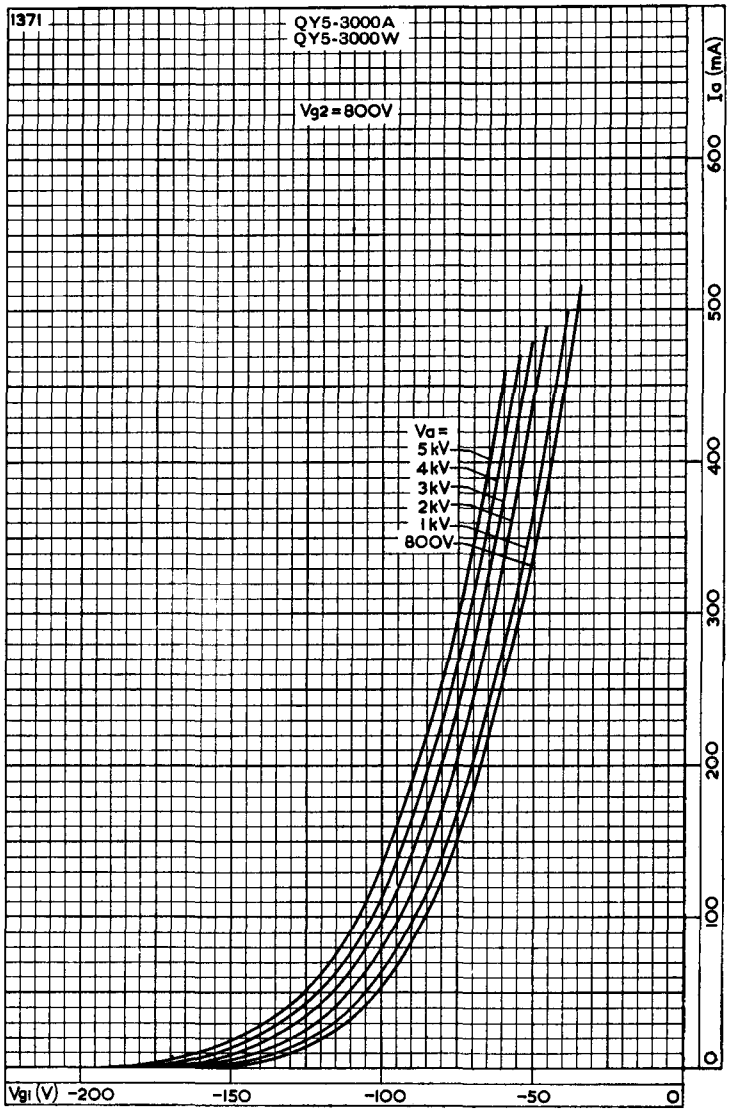

ANODE CURRENT PLOTTED AGAINST CONTROL-GRID VOLTAGE
WITH ANODE VOLTAGE AS PARAMETER

QY5-3000A
QY5-3000W

R.F. POWER TETRODE

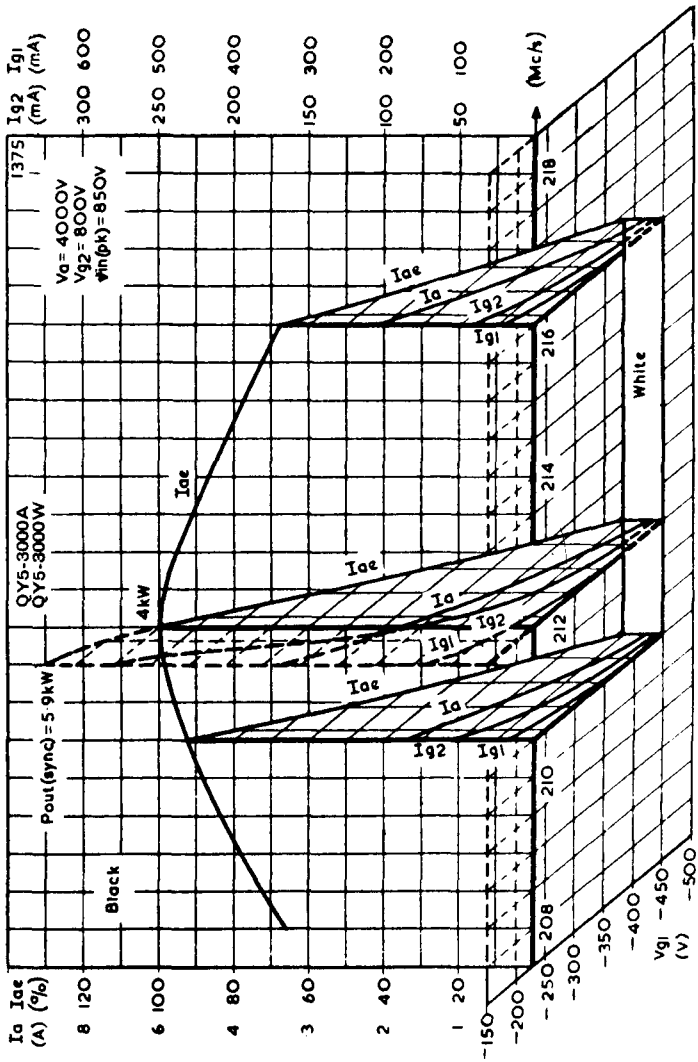

OPERATION OF TWO VALVES AS R.F. AMPLIFIER CLASS "C" GRID MODULATION FOR TELEVISION SERVICE, WITH NEGATIVE MODULATION AND POSITIVE SYNCHRONISATION

P_{out} (sync.) = 5.9kW

QY5-3000A
QY5-3000W

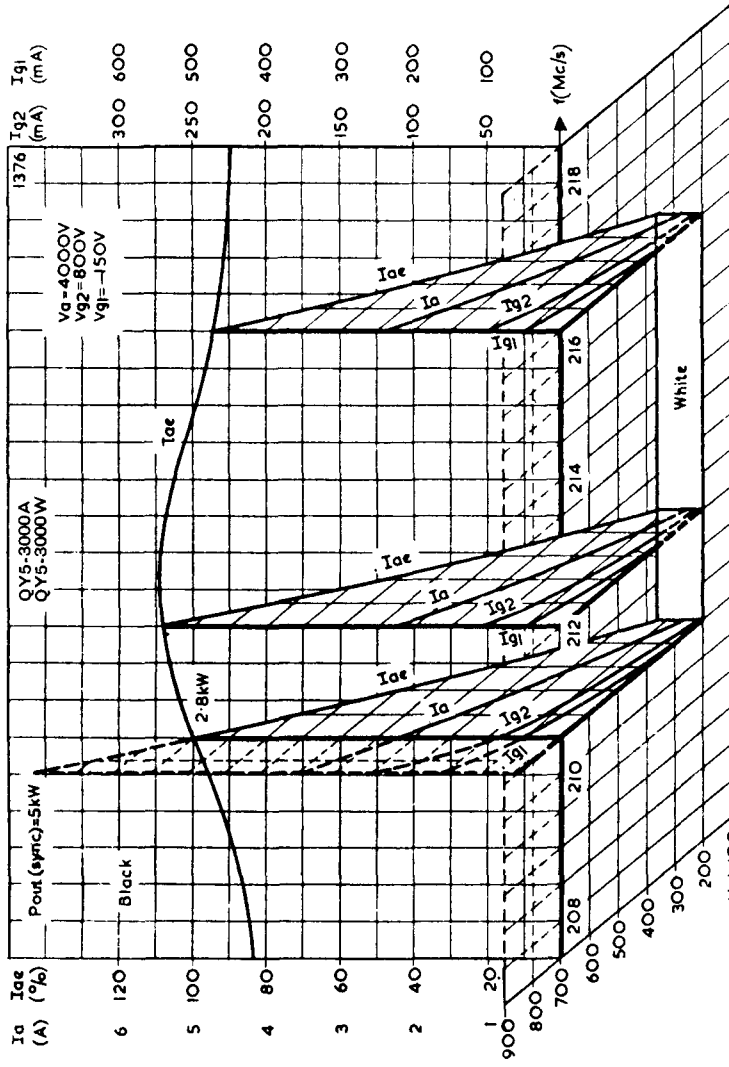

OPERATION OF TWO VALVES AS R.F. AMPLIFIER CLASS "B" FOR TELEVISION SERVICE, WITH NEGATIVE MODULATION AND POSITIVE SYNCHRONISATION