BEAM POWER TETRODE

QY4-400

Application: *Power amplifier, oscillator or modulator*
Power output: *1.1kW continuous rating*
Frequency: *110Mc/s at full ratings*
Construction: *Glass, forced-air cooled*

PRELIMINARY DATA

This data should be read in conjunction with GENERAL OPERATIONAL RECOMMENDATIONS—TRANSMITTING VALVES which precede this section of the handbook.

FILAMENT Thoriated tungsten

V_f	5.0	V
I_f	14.5	A

MOUNTING POSITION Vertical, base down

CAPACITANCES

C_{in}	12.7	pF
C_{out}	4.9	pF
C_{a-gl}	120	mpF

CHARACTERISTICS (measured at V_a = 2.5kV, V_{g2} = 500V, I_a = 100mA)

g_m	4.0	mA/V
μ_{g1-g2}	5.1	

COOLING

Forced-air cooling

T_{anode} seal max.	220	°C
T_{base} seals max.	180	°C
T_{bulb} max.	350	°C

p_a<250W

In order to keep within the temperature limits of the base seals, an air flow of at least 5cu.ft/min must be directed at the base and commence immediately the filament is energised.

p_a>250W

An air flow over the envelope up to 14cu.ft/min will be required. In order to assist the circulation of the cooling air, a glass chimney surrounding the valve should be used.

CLASS "C" AMPLIFIER AND OSCILLATOR

Limiting values (absolute ratings)

f max.	110	Mc/s
V_a max.	4.0	kV
V_{g2} max.	600	V
$-V_{g1}$ max.	500	V
p_a max.	400	W
p_{g2} max.	35	W
p_{g1} max.	10	W
I_k max.	420	mA
$i_{k(pk)}$ max.	2.2	A
R_{g1-f} max.	50	kΩ

Operating conditions

f	<75	<75	<75	Mc/s
V_a	2.5	3.0	4.0	kV
V_{g2}	500	500	500	V
V_{g1}	–200	–220	–220	V
I_a	350	350	350	mA
I_{g2}	46	46	40	mA
I_{g1}	6.5	6.0	6.0	mA
$v_{in(pk)}$	290	305	305	V
$P_{load\ (driver)}$	12	12	12	W
p_a	235	250	300	W
p_{g2}	17.5	15	12.5	W
η_a	73	76	79	%
P_{out}	0.64	0.8	1.1	kW
P_{load} ($\eta_{transfer}$ = 85%)	545	680	935	W

Operating conditions

f	100	100	Mc/s
V_a	3.5	4.0	kV
V_{g2}	500	500	V
V_{g1}	–170	–170	V
I_a	250	270	mA
I_{g2}	17	15.5	mA
I_{g1}	9.0	10	mA
$v_{in(pk)}$	235	240	V
$P_{load\ (driver)}$ (approx.)	20	20	W
p_a	225	280	W
η_a	74	74	%
P_{out} (approx.)	650	800	W
P_{load} ($\eta_{transfer}$ = 80%)	520	640	W

CLASS "C" AMPLIFIER (ANODE AND SCREEN-GRID MODULATION)

Limiting values (absolute ratings)

Carrier conditions for modulation factor of 1

f max.	75	Mc/s
V_a max.	3.2	kV
V_{g2} max.	600	V
$-V_{g1}$ max.	500	V
p_a max.	270	W
p_{g2} max.	35	W
p_{g1} max.	10	W
I_k max.	330	mA
$i_{k(pk)}$ max.	1.7	A
R_{g1-f} max.	50	kΩ

Operating conditions

f	≦75	≦75	≦75	Mc/s
V_a	2.0	2.5	3.0	kV
V_{g2}	500	500	500	V
V_{g1}	−220	−220	−220	V
I_a	275	275	275	mA
I_{g2}	30	28	26	mA
I_{g1}	6.0	6.0	6.0	mA
$v_{in(pk)}$	305	305	305	V
$P_{load\ (driver)}$	3.5	3.5	3.5	W
p_a	170	178	195	W
p_{g2}	15	14	13	W
η_a	69	74	76	%
P_{out}	380	510	630	W
P_{load} ($\eta_{transfer}$ = 85%)	325	435	535	W
For 100% modulation				
$P_{mod.}$	285	350	420	W
$v_{g2(pk)}$ mod.	400	400	400	V

CLASS "B" R.F. AMPLIFIER (S.S.B.)

Limiting values (absolute ratings)

f max.	110	Mc/s
V_a max.	4.0	kV
p_a max.	400	W
V_{g2} max.	850	V
p_{g2} max.	35	W
I_k max.	400	mA
R_{g1-f} max.	250	kΩ

Operating conditions

f	≦110	≦110	≦110	Mc/s
V_a	3.0	3.5	4.0	kV
V_{g2}	810	750	705	V
V_{g1}	−140	−135	−130	V
$I_{a(o)}$	90	75	65	mA
I_a (single tone)	300	280	250	mA
I_a (two tone)	215	200	175	mA
$I_{g2(o)}$	0	0	0	mA
I_{g2} (max. sig.)	18	15	11	mA
I_{g1}	0	0	0	mA
$v_{in(pk)}$	140	135	130	V
p_a (max. sig.)	395	400	375	W
p_{g2} (max. sig.)	7.0	9.0	12	W
P_{out} (two tone)	250	300	325	W
P.E.P.	500	600	650	W

QY4-400

BEAM POWER TETRODE

CLASS "AB" AUDIO AMPLIFIER AND MODULATOR (TWO VALVES IN PUSH-PULL)

Limiting values (absolute ratings)

V_a max.	4.0	kV
V_{g2} max.	800	V
V_{g2} max. (T_{pin}<120°C)	1.0	kV
p_a max.	400	W
p_{g2} max.	35	W
p_{g1} max.	10	W
I_k max.	400	mA
$i_{k(pk)}$ max.	1.3	A
R_{g1-f}	250	kΩ

Operating conditions (without I_{g1})

V_a	2.5	3.0	3.5	4.0	kV
V_{g2}	750	750	750	750	V
V_{g1} (approx.)	–130	–137	–145	–150	V
$I_{a(o)}$	2×95	2×80	2×70	2×60	mA
I_a (max. sig.)	2×318	2×318	2×305	2×292	mA
I_{g2} (max. sig.)	2×14	2×13	2×16	2×20	mA
$V_{in(g1-g1)}$ r.m.s.	184	194	205	212	V
p_a	2×370	2×400	2×400	2×400	W
η_a	53	58	62	66	%
R_{a-a}	6.8	8.9	11.5	14.5	kΩ
P_{out}	0.85	1.11	1.33	1.54	kW

Operating conditions (with I_{g1})

V_a	2.5	3.0	3.5	4.0	kV
V_{g2}	500	500	500	500	V
V_{g1} (approx.)	–75	–80	–85	–90	V
$I_{a(o)}$	2×95	2×90	2×80	2×80	mA
I_a (max. sig.)	2×350	2×350	2×350	2×319	mA
I_{g2} (max. sig.)	2×25	2×20	2×19	2×16	mA
I_{g1}	2×3.0	2×3.0	2×3.0	2×3.0	mA
$V_{in(g1-g1)}$ r.m.s.	205	205	215	215	V
P_{drive}	8.6	9.0	10.2	7.0	W
p_a	2×320	2×362	2×400	2×400	W
η_a	63	65	67	69	%
R_{a-a}	8.0	10	11.3	15	kΩ
P_{out}	1.11	1.375	1.65	1.75	kW

WEIGHT

Valve only	9	oz
	255	g

ACCESSORIES

Socket	40211/01
Anode connector	40624
Glass chimney	40666

QY4-400

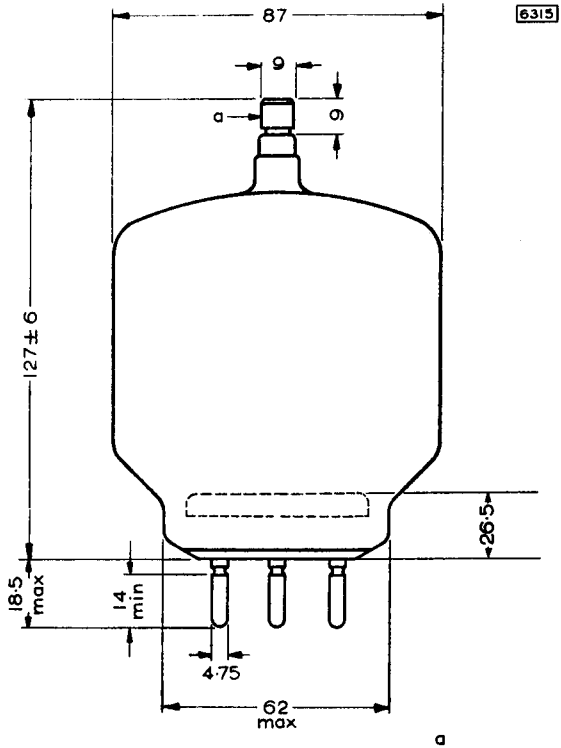

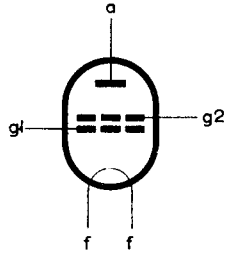

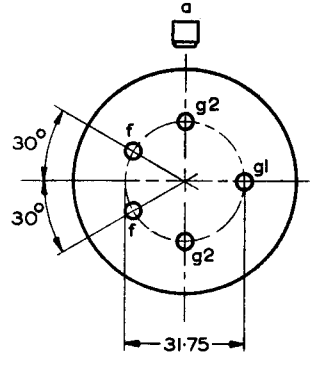

All dimensions in mm

B5F Base.

QY4-400

BEAM POWER TETRODE

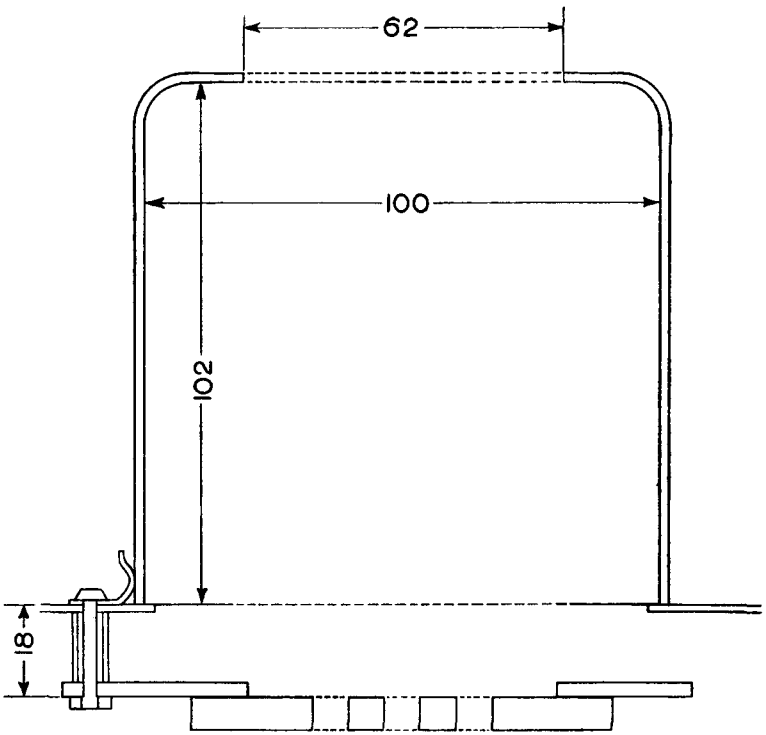

Glass chimney

All dimensions in mm

6451

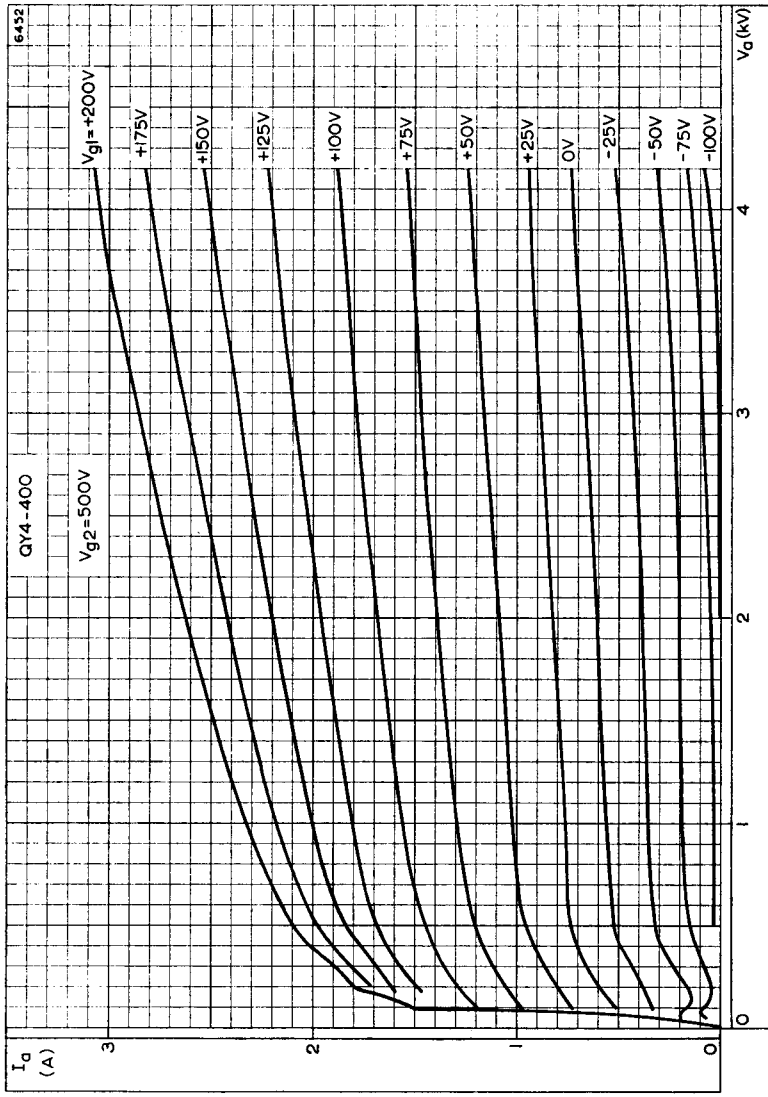

ANODE CURRENT PLOTTED AGAINST ANODE VOLTAGE WITH CONTROL-GRID VOLTAGE AS PARAMETER

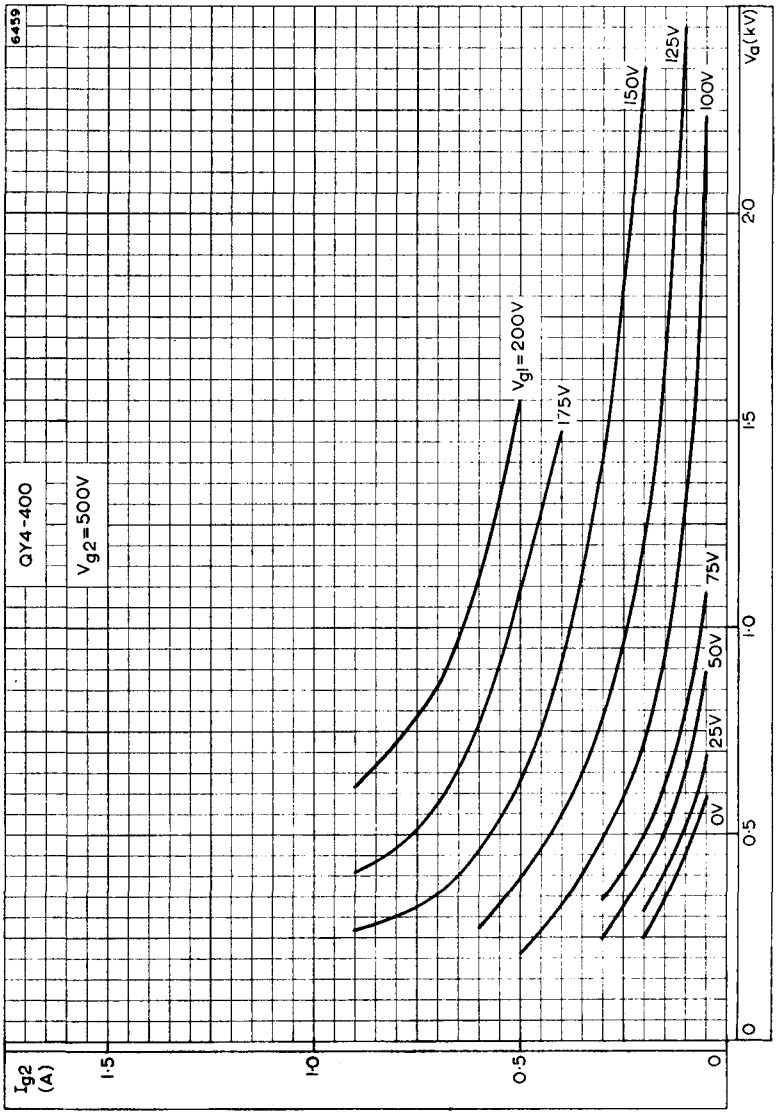

SCREEN-GRID CURRENT PLOTTED AGAINST ANODE VOLTAGE WITH CONTROL-GRID VOLTAGE AS PARAMETER

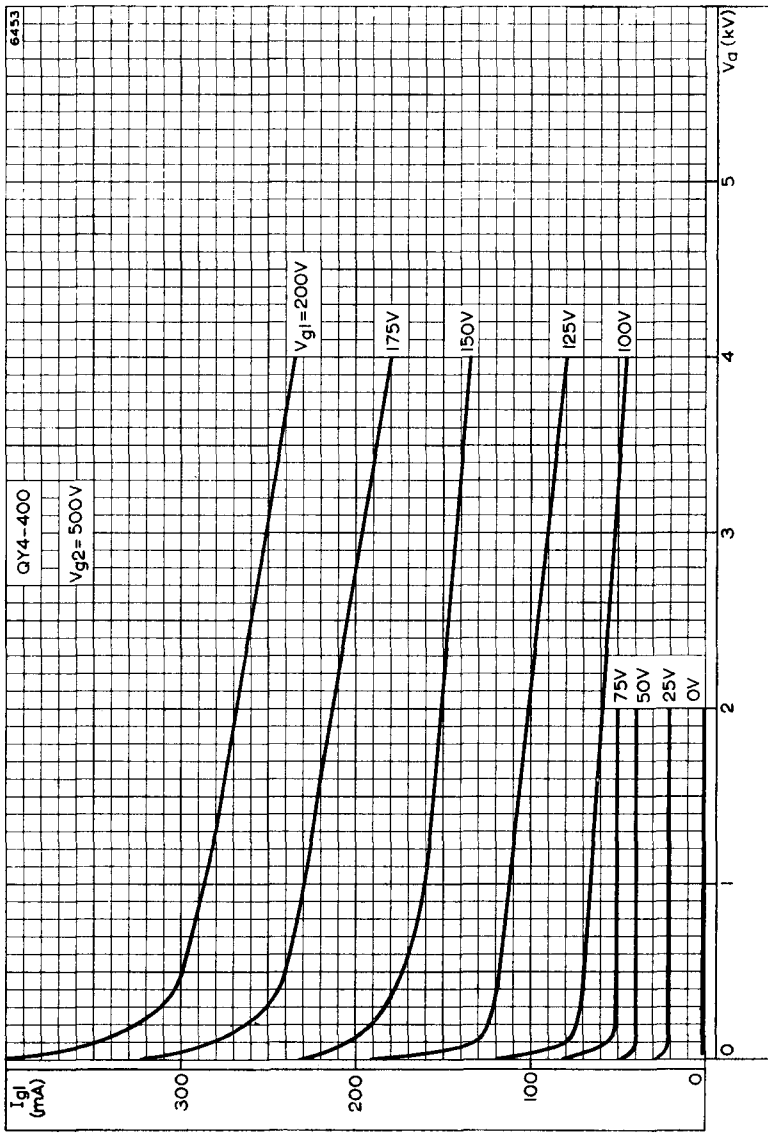

CONTROL-GRID CURRENT PLOTTED AGAINST ANODE VOLTAGE WITH CONTROL-GRID VOLTAGE AS PARAMETER

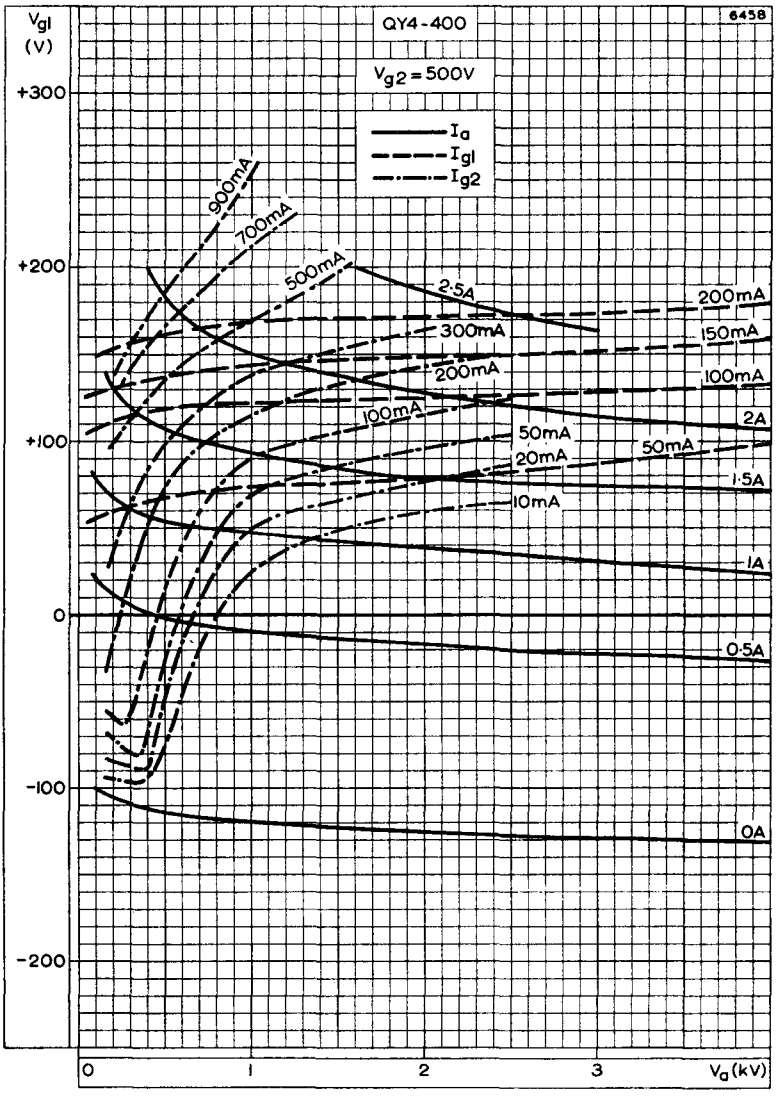

CONSTANT CURRENT CURVES

QUICK REFERENCE DATA

Forced-air cooled beam power tetrode suitable for use as power amplifier, oscillator or modulator.

	Class 'B' Linear Amplifier for S.S.B. operation	Class 'C' Telephony Anode and Screen Grid Modulation	Class 'C' Telegraphy or F.M. Telephony	
f	60	75	100	Mc/s
P_{out}	*650	630	800	W
f max.	110	75	110	Mc/s
V_a max.	4.0	3.2	4.0	kV
p_a max.	400	270	400	W

* P.E. P_{out}

To be read in conjunction with
GENERAL OPERATIONAL RECOMMENDATIONS - TRANSMITTING VALVES

CLASS 'C' TELEGRAPHY OR F.M. TELEPHONY

Maximum operating conditions

f	<75	<75	<75	100	100	Mc/s
P_{out}	640	800	1100	650	800	W
P_{load}	550	680	940	520	640	W
η_a	73	76	79	74	74	%
V_a	2.5	3.0	4.0	3.5	4.0	kV
I_a	350	350	350	250	270	mA
V_{g2}	500	500	500	500	500	V
I_{g2}	35	30	25	17	16	mA
$-V_{g1}$	200	220	220	170	170	V
I_{g1}	6.5	6.0	6.0	9.0	10	mA
$v_{in\ (pk)}$	290	305	305	235	240	V
P_{load} (driver)	12	12	12	20	20	W
p_a	235	250	300	225	280	W
p_{g2}	17.5	15	12.5	8.5	8.0	W

CLASS 'C' TELEPHONY ANODE AND SCREEN-GRID MODULATION

Maximum operating conditions

	C.C.S.			I.C.A.S.	
f	75	75	75	30	Mc/s
P_{out}	380	510	630	765	W
P_{load}	324	435	540	650	W
η_a	69	74	76	77	%
V_a	2.0	2.5	3.0	3.65	kV
I_a	275	275	275	275	mA
V_{g2}	500	500	500	500	V
I_{g2}	40	38	36	30	mA
$-V_{g1}$	220	220	220	225	V
I_{g1}	6.0	6.0	6.0	6.0	mA
$v_{in(pk)}$	305	308	305	308	V
P_{load} (driver)	3.5	3.5	3.5	-	W
p_a	170	178	195	235	W
p_{g2}	20	19	18	15	W
For 100% modulation					
P_{mod}	275	344	413	500	W
$v_{g2(pk)}$	400	400	400	400	V

CLASS 'B' LINEAR AMPLIFIER FOR SINGLE SIDEBAND OPERATION

Maximum operating conditions at $I_{a(o)}$ = 90mA

f	60	Mc/s
P.E. P_{out}	500	W
P.E. P_{load}	425	W
**d_3	36	dB
**d_5	42	dB
V_a	3.0	kV
V_{g2}	810	V
***$-V_{g1}$	140	V
$I_{a(o)}$	90	mA
$I_{g2(o)}$	0	mA

	Single tone	Double tone	
I_a	300	215	mA
I_{g2}	15	11	mA
I_{g1}	0	0	mA
$v_{in(pk)}$	140	-	V
P_{load} (driver)	3.0	-	W
p_a	400	395	W
η_a	56	39	%

Maximum operating conditions at $I_{a(o)}$ = 75mA

f	60	Mc/s
P.E. P_{out}	600	W
P.E. P_{load}	510	W
**d_3	36	dB
**d_5	40	dB
V_a	3.5	kV
V_{g2}	750	V
***$-V_{g1}$	135	V
$I_{a(o)}$	75	mA
$I_{g2(o)}$	0	mA

	Single tone	Double tone	
I_a	280	200	mA
I_{g2}	12	8.4	mA
I_{g1}	0	0	mA
$v_{in(pk)}$	135	–	V
P_{load} (driver)	3.0	–	W
p_a	380	400	W
η_a	61	43	%

Maximum operating conditions at $I_{a(o)}$ = 65mA

f	60	Mc/s
P.E. P_{out}	650	W
P.E. P_{load}	550	W
**d_3	34	dB
**d_5	40	dB
V_a	4.0	kV
V_{g2}	705	V
***$-V_{g1}$	130	V
$I_{a(o)}$	65	mA
$I_{g2(o)}$	0	mA

	Single tone	Double tone	
I_a	250	175	mA
I_{g2}	10	7.0	mA
I_{g1}	0	0	mA
$v_{in\ (pk)}$	130	-	V
P_{load} (driver)	3.0	-	W
p_a	350	375	W
η_a	65	47	%

**Third and fifth order intermodulation products.
Maximum values encountered at any level of drive voltage referred to the amplitude of either of the two tones at that level.

***Adjust to give the desired value of $I_{a(o)}$.

CLASS 'AB2' AUDIO AMPLIFIER

Maximum operating conditions for two valves in push-pull

P_{out}	1.11	1.38	1.65	1.75	kW
R_{a-a}	9.0	10	11.3	15	kΩ
V_a	2.5	3.0	3.5	4.0	kV
V_{g2}	500	500	500	500	V
**-V_{g1}	75	80	85	90	V
$I_{a(o)}$	2 x 95	2 x 90	2 x 80	2 x 80	mA
I_a (max. sig)	2 x 350	2 x 350	2 x 350	2 x 319	mA
I_{g2} (max. sig)	2 x 30	2 x 20	2 x 20	2 x 20	mA
I_{g1}	2 x 7.0	2 x 6.5	2 x 6.5	2 x 6.0	mA
$V_{in\,(g1-g1)}$ r.m.s.	205	205	215	215	V
P_{load} (driver)	8.6	9.0	10.2	7.0	W
p_a	2 x 320	2 x 362	2 x 400	2 x 400	W
η_a	64	66	68	69	%

CLASS 'AB1' AUDIO AMPLIFIER

Maximum operating conditions for two valves in push-pull

P_{out}	0.85	1.11	1.33	1.54	kW
R_{a-a}	6.8	8.9	11.5	14.5	kΩ
V_a	2.5	3.0	3.5	4.0	kV
V_{g2}	750	750	750	750	V
**-V_{g1}	130	137	145	150	V
$I_{a(o)}$	2 x 95	2 x 80	2 x 70	2 x 60	mA
I_a (max. sig)	2 x 318	2 x 318	2 x 305	2 x 293	mA
I_{g2} (max. sig)	2 x 11.6	2 x 11	2 x 13.5	2 x 15	mA
$V_{in\,(g1-g1)}$ r.m.s.	184	194	205	212	V
p_a	2 x 370	2 x 400	2 x 400	2 x 400	W
η_a	54	58	63	66	%

**Adjust to give the desired value of $I_{a(o)}$.

ABSOLUTE MAXIMUM RATINGS

	Class 'AB1' or 'AB2' audio	Class 'B' S.S.B.	Class 'C' Telephony C.C.S.	Class 'C' Telephony I.C.A.S.	Class 'C' Telegraphy	
f max.	-	110	75	30	110	Mc/s
V_a max.	4.0	4.0	3.2	4.0	4.0	kV
V_{g2} max.	*800	850	600	600	600	V
$-V_{g1}$ max.	-	-	500	500	500	V
I_k max.	400	400	330	330	420	mA
p_a max.	400	400	270	270	400	W
p_{g2} max.	35	35	35	35	35	W
I_{g1} max.	25	-	25	25	25	mA
p_{g1} max.	10	-	10	10	10	W
R_{g1-f} max.	250	250	50	50	50	kΩ

*This can be increased to 1.0kV if $T_{base-seals} < 120^{o}C$.

CATHODE

Directly heated, thoriated tungsten

V_f	5.0	V
I_f	14.1	A

CAPACITANCES

c_{a-g1}	120	mpF
c_{out}	4.9	pF
c_{in}	12.7	pF

CHARACTERISTICS (measured at V_a=2.5kV, V_{g2}=500V, I_a=100mA)

g_m	4.0	mA/V
μ_{g1-g2}	5.1	

MOUNTING POSITION

Vertical, base up or down

COOLING

Forced-air

Maximum temperatures

Anode seal	220	°C
Base seals	180	°C
Bulb	350	°C

p_a < 250W

In order to keep within the temperature limits of the base seals, an air flow of at least 5ft^3/min (0.15m^3/min) must be directed at the base and commence immediately the filament is energised.

p_a > 250W

An air flow over the envelope up to 14ft^3/min (0.4 m^3/min) will be required. In order to assist the circulation of the cooling air, a glass chimney surrounding the valves should be used.

PHYSICAL DATA

	lb	kg
Weight of valve	0.42	0.19
Weight of valve and carton (9 valves per carton)	6.5	2.95

ACCESSORIES

Socket	40211/01
Anode connector	40624
Glass chimney	40666

DIMENSIONS OF VALVE

	Inches	Millimetres		Inches	Millimetres
A	0.728	18.5 max.	D	0.354	9.0
B	5.000 ± 0.236	127 ± 6.0	E	0.354	9.0
C	3.425	87	F	2.441	62 max.

Inch dimensions derived from original millimetre dimensions

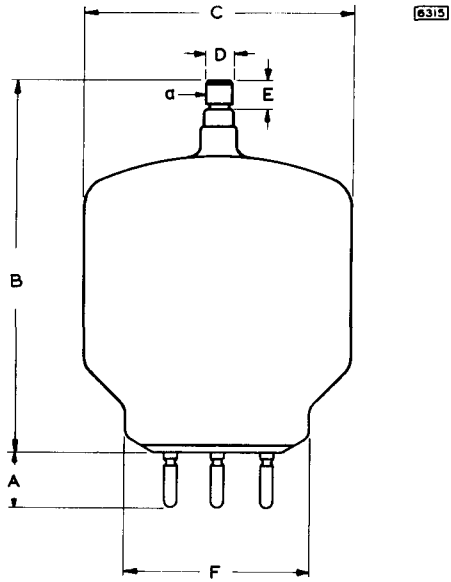

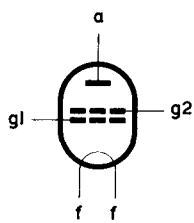

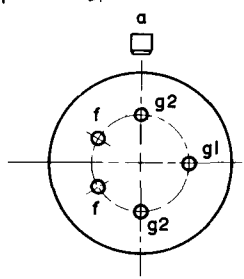

B5F Base

(According to B.S.448)

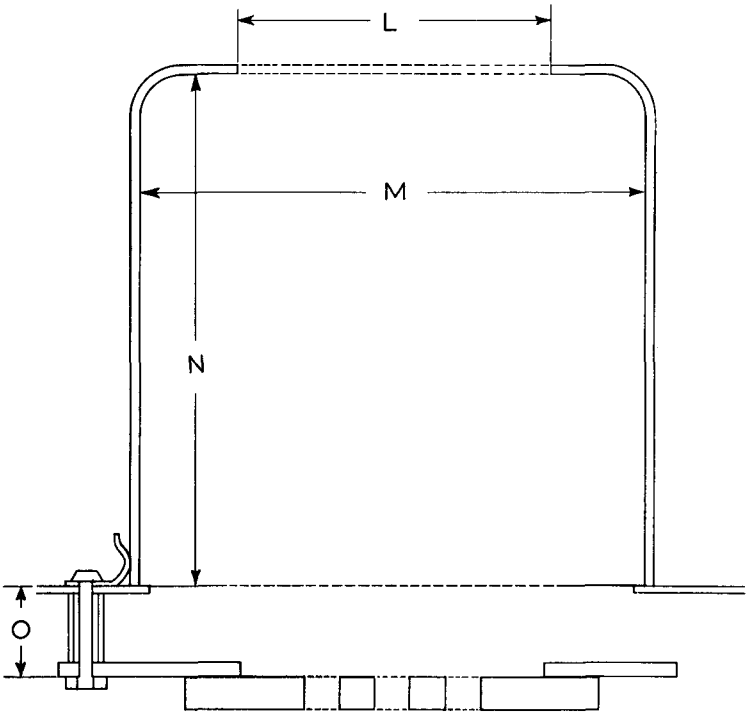

Glass chimney

6451

All dimensions in mm

DIMENSIONS OF GLASS CHIMNEY

	Inches	Millimetres
L	2.441	62
M	3.937	100
N	4.016	102
O	0.709	18

Inch dimensions derived from original millimetre dimensions

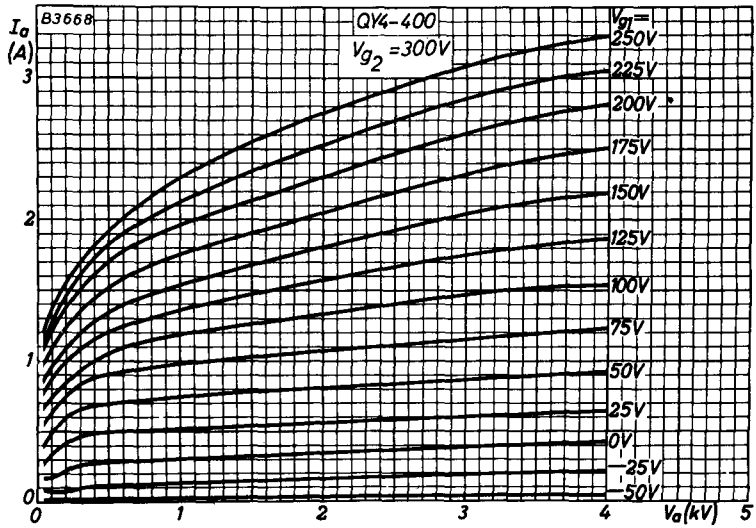

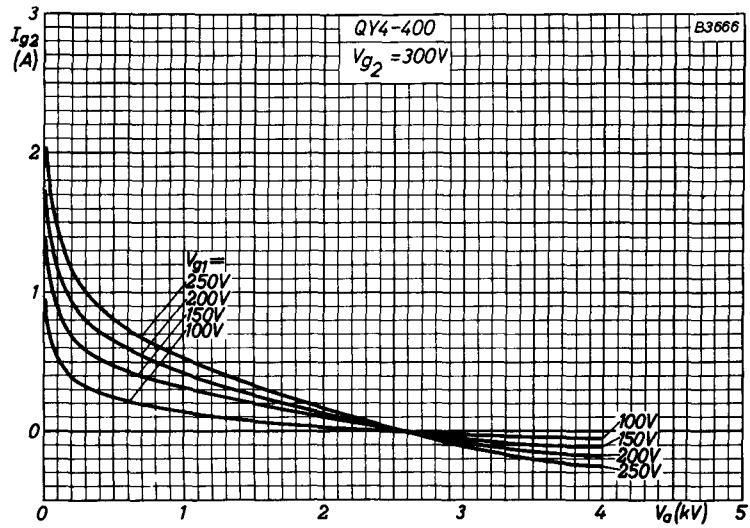

ANODE AND SCREEN-GRID CURRENTS PLOTTED AGAINST ANODE VOLTAGE WITH CONTROL-GRID VOLTAGE AS PARAMETER. V_{g2} =300V

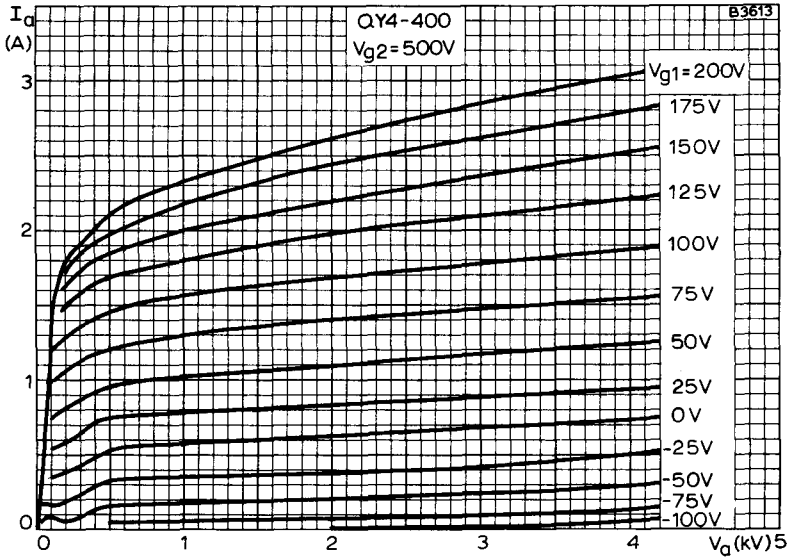

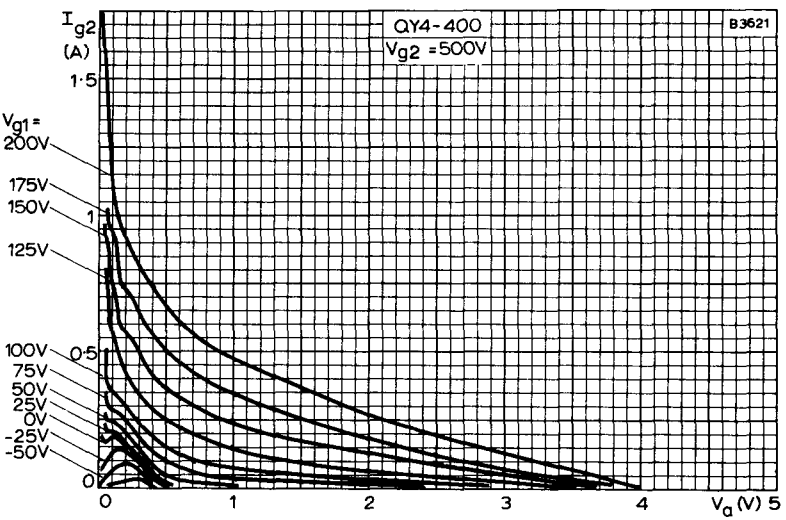

ANODE AND SCREEN-GRID CURRENTS PLOTTED AGAINST ANODE VOLTAGE WITH CONTROL-GRID VOLTAGE AS PARAMETER. V_{g2} =500V

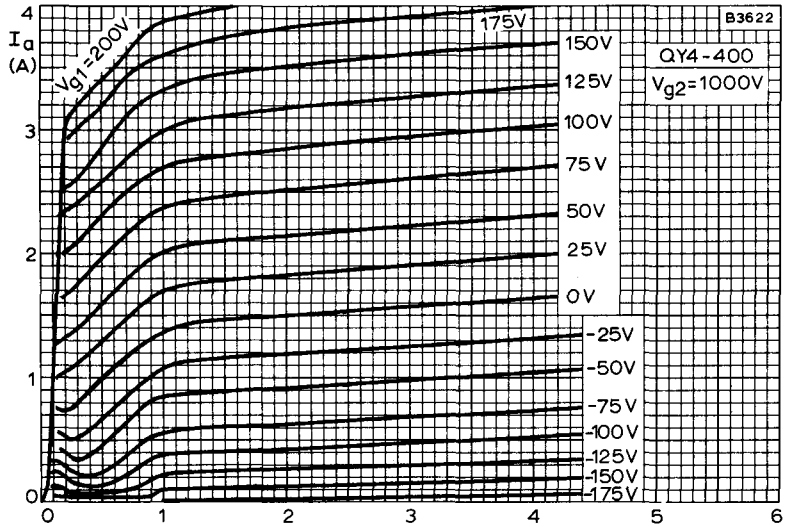

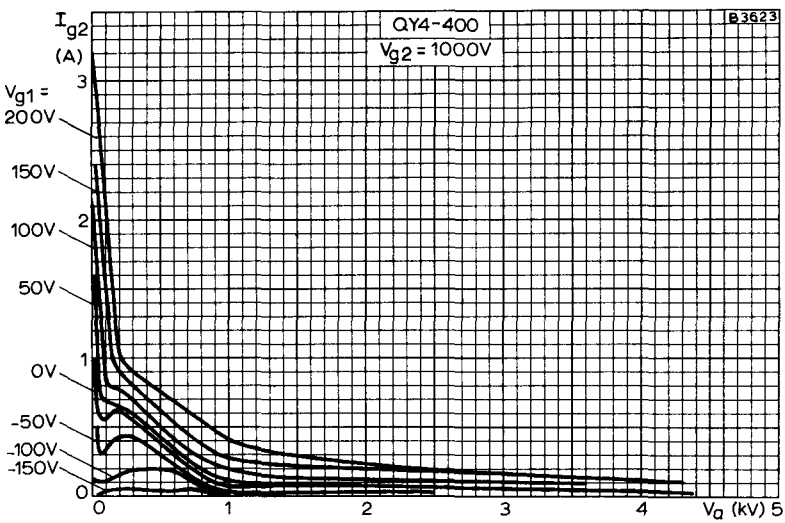

ANODE AND SCREEN-GRID CURRENTS PLOTTED AGAINST ANODE VOLTAGE WITH CONTROL-GRID VOLTAGE AS PARAMETER. V_{g2} = 1000V

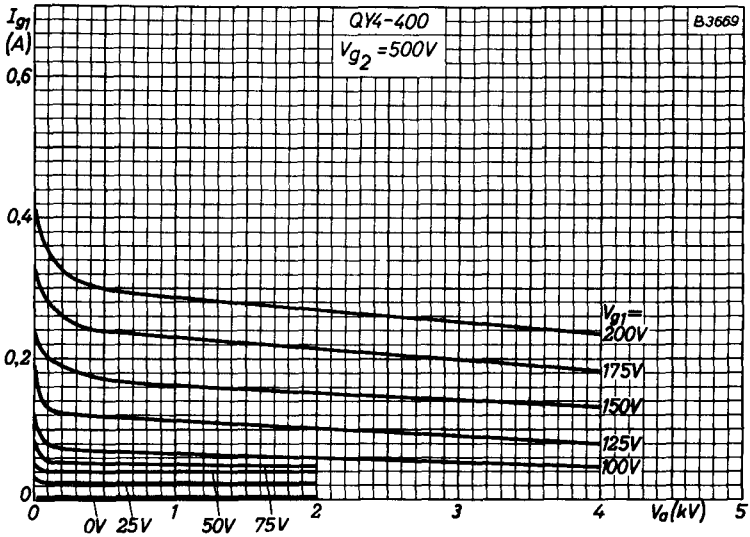

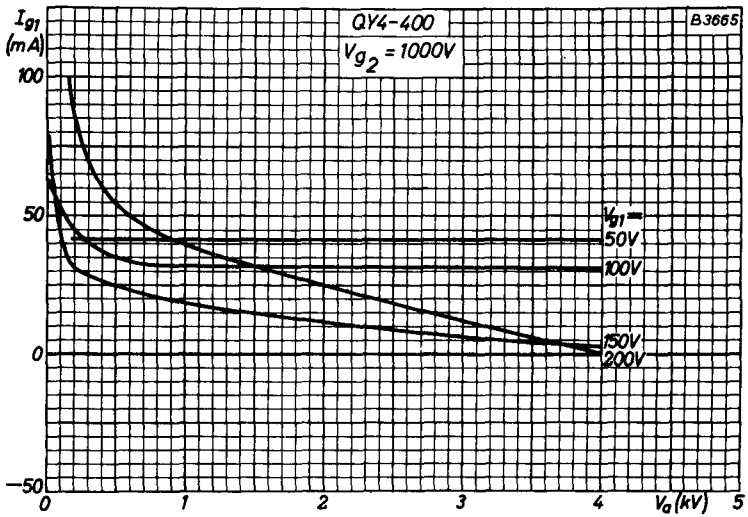

CONTROL-GRID CURRENT PLOTTED AGAINST ANODE VOLTAGE WITH CONTROL-GRID VOLTAGE AS PARAMETER. V_{g2} = 500V AND 1000V

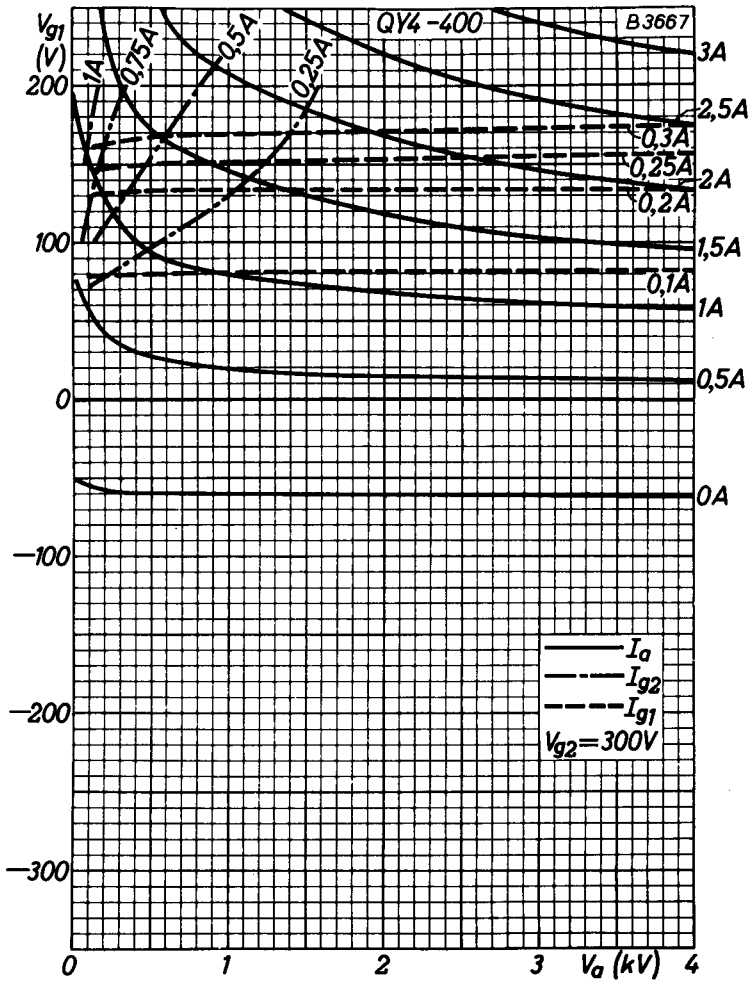

CONSTANT CURRENT CHARACTERISTICS. V_{g2}=300V

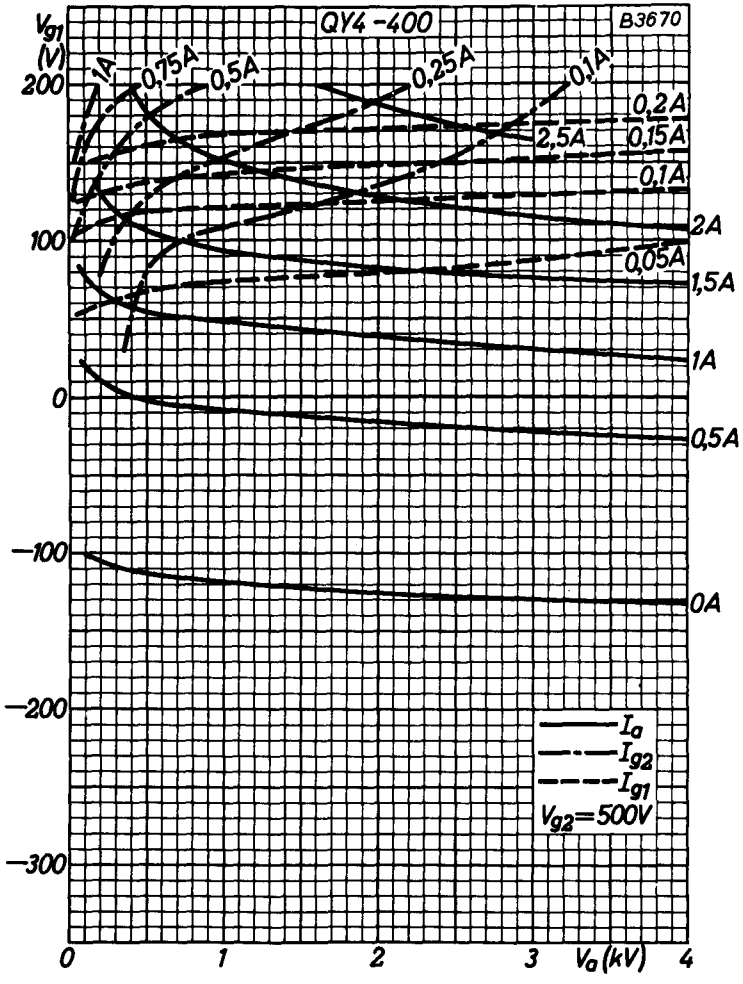

CONSTANT CURRENT CHARACTERISTICS. V_{g2} = 500V