V.H.F. POWER TETRODE

QY3-65

All glass tetrode rated for a maximum anode dissipation of 65W and suitable for use at frequencies up to 250Mc/s.

PRELIMINARY DATA

This data should be read in conjunction with "Operating Notes, Part 1—Power Valves" included in this volume of the Handbook.

FILAMENT Thoriated tungsten.

V_f	6.0	V
I_f	3.5	A

MOUNTING POSITION Vertical, base up or down.

CAPACITANCES

c_{in}	8.0	pF
c_{out}	2.1	pF
c_{a-g1}	0.08	pF

CHARACTERISTICS (measured at V_a=500V; V_{g2}=250V; I_a=125mA)

g_m	4.0	mA/V
μ_{g1-g2}	5.0	

COOLING

Max. temperature of anode seals and envelope 225 °C

In order to keep within the temperature limits it may be necessary to direct a flow of air on to the anode seal and the base of the valve when operated at frequencies above 50Mc/s. The air stream on to the base should be directed so that it passes over the envelope. Below 50Mc/s radiation cooling from the envelope is sufficient but an anode terminal connector of large surface area is necessary in order to keep the anode seal cool.

ACCESSORIES

Information on these items can be obtained from the Industrial Technical Service Dept., Mullard Ltd.

OPERATING CONDITIONS AS SINGLE VALVE R.F. POWER AMPLIFIER (CLASS "C" TELEGRAPHY OR F.M. TELEPHONY)

Limiting Values

V_a max.	3.0	kV
p_a max.	65	W
V_{g2} max.	400	V
p_{g2} max.	10	W
p_{g1} max.	5.0	W
I_k max.	230	mA
$i_{k(pk)}$ max.	1.2	A
$-V_{g1}$ max.	500	V
R_{g1-f} max.	25	kΩ

QY3-65

V.H.F. POWER TETRODE

All glass tetrode rated for a maximum anode dissipation of 65W and suitable for use at frequencies up to 250Mc/s.

Typical Operating Conditions

f	≦50	≦50	≦50	≦220	Mc/s
V_a	600	1500	3000	1500	V
V_{g2}	250	250	250	250	V
V_{g1}	–75	–85	–100	–85	V
I_a	150	150	115	117	mA
I_{g2}	40	40	22	35	mA
I_{g1}	18	18	10	20	mA
$v_{in\ (pk)}$	170	180	170	190	V
*P_{drive} (approx)	4.0	4.0	3.0	10	W
p_a	45	60	65	65	W
P_{out}	45	165	280	110	W
†P_{load}	36	130	224	88	W
η	50	73	81	63	%

*Includes typical fixed frequency grid circuit loss.

†With a circuit transfer efficiency of 80%.

OPERATING CONDITIONS AS SINGLE VALVE R.F. POWER AMPLIFIER (CLASS "C" TELEPHONY. ANODE AND SCREEN-GRID MODULATION)

Limiting Values (carrier condition)

V_a max.	2.5	kV
p_a max.	45	W
V_{g2} max.	400	V
p_{g2} max.	10	W
p_{g1} max.	5.0	W
I_k max.	190	mA
$i_{k(pk)}$ max.	1.0	A
$-V_{g1}$ max.	500	V
R_{g1-t} max.	25	kΩ

Typical Operating Conditions

f	≦50	≦50	≦50	≦220	Mc/s
V_a	600	1500	2500	1500	V
V_{g2}	250	250	250	250	V
V_{g1}	–120	–125	–135	–85	V
I_a	120	120	110	80	mA
I_{g2}	40	40	25	27	mA
$v_{in(pk)}$	215	220	215	185	V
I_{g1}	15	16	12	12	mA
*P_{drive}	4.0	4.5	3.5	10	W
p_a	27	40	45	45	W
P_{out}	45	140	230	75	W
†P_{load}	36	112	185	60	W
η	62	62	84	63	%
For 100% Modulation					
$v_{g2(pk)\ mod.}$	250	250	250	250	V
$P_{mod.}$	36	90	125	60	W

*Includes typical fixed frequency grid circuit loss.

†With a circuit transfer efficiency of 80%.

V.H.F. POWER TETRODE

QY3-65

All glass tetrode rated for a maximum anode dissipation of 65W and suitable for use at frequencies up to 250Mc/s.

OPERATING CONDITIONS FOR TWO VALVES IN PUSH-PULL AS CLASS "AB" A.F. POWER AMPLIFIER OR MODULATOR

Limiting Values (per valve)

V_a max.	3.0	kV
p_a max.	65	W
V_{g2} max.	600	V
p_{g2} max.	10	W
p_{g1} max.	5.0	W
I_k max.	220	mA
$i_{k(pk)}$ max.	750	mA
R_{g1-f} max.	250	kΩ

Typical Operating Conditions (Without I_{g1})

V_a	1.0	1.5	1.75	kV
V_{g2}	500	500	500	V
V_{g1}	−100	−110	−115	V
$I_{a(o)}$	2×30	2×30	2×20	mA
I_a (max. sig.)	2×85	2×90	2×85	mA
I_{g2} (max. sig.)	2×15	2×10	2×11.5	mA
$V_{in(g1-g1)(r.m.s.)}$	120	120	128	V
p_a	2×45	2×63	2×62	W
P_{out}	80	145	175	W
R_{a-a}	9.0	15	20	kΩ
η	47	54	59	%

Typical Operating Conditions (With I_{g1})

V_a	600	1000	1500	1800	V
V_{g2}	250	250	250	250	V
V_{g1}	−40	−40	−45	−50	V
$I_{a(o)}$	2×30	2×30	2×30	2×25	mA
I_a (max. sig.)	2×150	2×150	2×125	2×110	mA
I_{g2} (max. sig.)	2×40	2×30	2×20	2×15	mA
I_{g1} (max. sig.)	2×15	2×14	2×10	2×9.0	mA
$V_{in(g1-g1)(r.m.s.)}$	170	148	141	127	V
P_{drive}	2×4.0	2×3.0	2×3.8	2×2.6	W
p_a	2×45	2×65	2×63	2×63	W
P_{out}	90	170	250	270	W
R_{a-a}	3.6	6.8	14	20	kΩ
η	50	57	67	68	%

WEIGHT

Valve only	3	oz
	85	g

QY3-65

V.H.F. POWER TETRODE

All glass tetrode rated for a maximum anode dissipation of 65W and suitable for use at frequencies up to 250Mc/s.

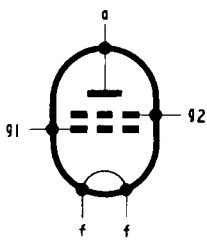

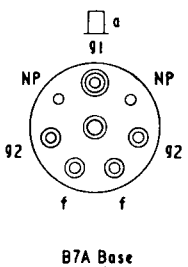

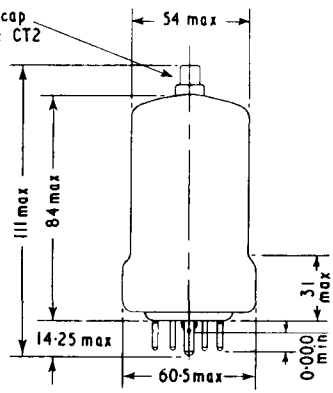

1882

All dimensions in mm