U.H.F. POWER TETRODE

QV2-250B

Application: *U.H.F. amplifier*
Power output: *390W*
Frequency: *500Mc/s at full ratings*
Construction: *External anode, forced-air cooled*

PRELIMINARY DATA

This data should be read in conjunction with GENERAL OPERATIONAL RECOMMENDATIONS–TRANSMITTING VALVES which precede this section of the handbook.

CATHODE

Indirectly heated

V_h	6.0	V
I_h	2.6	A
Minimum heating time	30	s

MOUNTING POSITION

Any

CAPACITANCES

$C_{a\ g1}$	<60	mpF
C_{g1-k}	15.7	pF
C_{a-k}	4.5	pF

CHARACTERISTICS (measured at V_a=500V, V_{g2}=250V, I_a=200mA)

μ_{g1-g2}	5.2	
g_m	12	mA/V

COOLING

Maximum temperature of anode core	250	°C
Maximum temperature of envelope seals	250	°C
Maximum temperature of base seals	175	°C

Air cooling must commence simultaneously with the application of heater voltage. A socket and air system chimney must be used to direct air on to the base seals, past the screen-grid seal and envelope, and through the radiator.

A typical value of air flow for maximum anode dissipation is given in the following table:

Anode dissipation	*Height above sea-level*	*Input temperature*	*Rate of flow of air*	*Pressure difference between inlet and outlet*
p_a	h	T_{in}		
(W)	(m)	(°C)	(m^3/min)	(mm of H_2O)
250	0	20	0.11	6.4

QV2-250B

U.H.F. POWER TETRODE

CLASS 'C' TELEGRAPHY

Limiting values (absolute ratings)

f max.	500	Mc/s
V_a max.	2.0	kV
I_a max.	250	mA
V_{g2} max.	300	V
$-V_{g1}$ max.	250	V
p_a max.	250	W
p_{g2} max.	12	W
p_{g1} max.	2.0	W

Typical operation

f	175	175	175	175	500	Mc/s
V_a	0.5	1.0	1.5	2.0	2.0	kV
I_a	250	250	250	250	250	mA
V_{g2}	250	250	250	250	300	V
I_{g2}	45	38	21	19	10*	mA
V_{g1}	−90	−90	−90	−90	−90	V
I_{g1}	35	31	28	26	25*	mA
p_a	55	60	95	110	—	W
$v_{in(pk)}$	114	114	112	112	—	V
η_a	56	76	75	78	—	%
P_{out}	70	190	280	390	225*	W

*Measured values for a circuit having an efficiency of approximately 75%.

Note: When the valve is operated at maximum input as a class 'C' amplifier it is necessary to reduce the heater voltage according to the table below.

	≤300Mc/s	300 to 400Mc/s	400 to 500Mc/s
V_h	6.0V	5.75V	5.5V

CLASS 'C' ANODE AND SCREEN-GRID MODULATION

Limiting values (absolute ratings)

f max.	500	Mc/s
V_a max.	1.5	kV
I_a max.	200	mA
V_{g2} max.	300	V
$-V_{g1}$ max.	250	V
p_a max.	165	W
p_{g2} max.	12	W
p_{g1} max.	2.0	W

Typical operation

f	175	175	175	Mc/s
V_a	0.5	1.0	1.5	kV
I_a	200	200	200	mA
V_{g2}	250	250	250	V
I_{g2}	31	22	20	mA
V_{g1}	–100	–100	–100	V
I_{g1}	15	14	14	mA
p_a	40	55	65	W
p_{g2}	7.75	5.5	5.0	W
$v_{in(pk)}$	118	117	117	V
η_a	60	72.5	78	%
P_{out}	60	145	235	W
For 100% modulation				
P_{mod}	50	100	150	W

CLASS 'B' R.F. AMPLIFIER (S.S.B.)

Limiting values (absolute ratings)

f max.	500	Mc/s
V_a max.	2.0	kV
I_a max.	250	mA
V_{g2} max.	400	V
$-V_{g1}$ max.	250	V
p_a max.	250	W
p_{g2} max.	12	W

Typical operation (for two tone modulation)

The r.f. voltage is modulated by two sinusoidal a.f. signals of equal amplitude but different frequency.

f	175	175	175	Mc/s
V_a	1.0	1.5	2.0	kV
V_{g2}	315	300	300	V
V_{g1}	–44.5	–45	–47	V
R_{load}	1.85	2.9	4.2	kΩ
$I_{a(o)}$	100	75	75	mA
$I_{a(max.\ sig.)}$	180	165	160	mA
$I_{g2(o)}$	–4.0	–2.0	–1.0	mA
$I_{g2(max.\ sig.)}$	0	–5.0	–5.0	mA
I_{g1}	0	0	0	mA
$v_{in(pk)}$	44.5	45	47	V
$p_{a(max.\ sig.)}$	115	140	170	W
P_{out}	65	110	150	W
P.E.P.	130	220	300	W

QV2-250B U.H.F. POWER TETRODE

CLASS 'AB' A.F. AMPLIFIER AND MODULATOR

Limiting values (absolute ratings)

V_a max.	2.0	kV
I_a max.	250	mA
V_{g2} max.	400	V
p_a max.	250	W
p_{g2} max.	12	W
p_{g1} max.	2.0	W
R_{g1-k} max.	100	kΩ

Typical operation (two valves)

V_a	1.0	1.5	2.0	kV
V_{g2}	350	350	350	V
V_{g1}	−55	−55	−55	V
$I_{a(o)}$	2×100	2×100	2×100	mA
$I_{a(max.\ sig.)}$	2×250	2×250	2×250	mA
$I_{g2(o)}$	2×0	2×0	2×0	mA
$I_{g2(max.\ sig.)}$	2×10	2×8.0	2×5.0	mA
$V_{in(g1-g1)\ r.m.s.}$	70.7	70.7	70.7	V
p_a	2×130	2×160	2×200	W
R_{a-a}	3.5	6.2	9.5	kΩ
η_a	48	57	60	%
P_{out}	240	430	600	W

CIRCUIT NOTES

1. All four cathode connections must be used.
2. For low frequency operation the screen-grid connection is made to pin 1. At radio frequencies the contact ring must be used for connecting the screen grid.

WEIGHT

Valve only	4.3	oz
	120	g
Shipping weight	10.6	oz
	300	g

DIMENSIONS

	Inches	*Millimetres*	
A	1.626 ± 0.016	41.3 ± 0.4	
B	0.566 ± 0.007	14.375 ± 0.175	
C	0.240	6.1	min.
D	0.768 ± 0.040	19.05 ± 1.01	
E	2.465	62.6	max.
F	0.780 ± 0.026	19.71 ± 0.66	
G	1.406	35.71	max.
H	0.388	9.85	max.
J	0.002	0.51	min.

QV2-250B

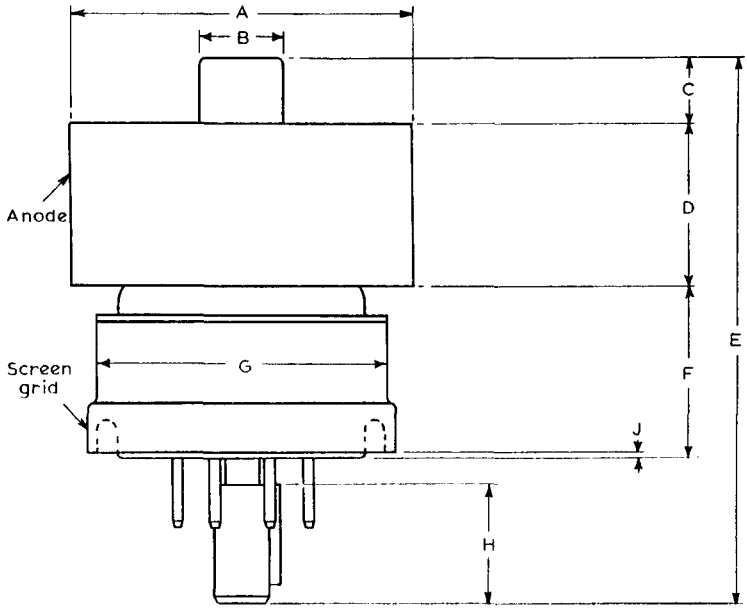

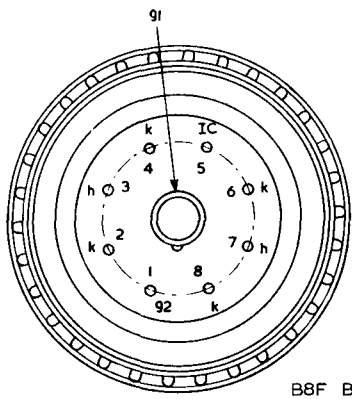

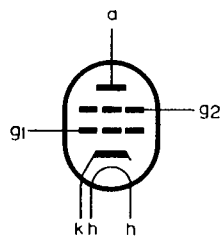

B8F Base

8193

QV2-250B

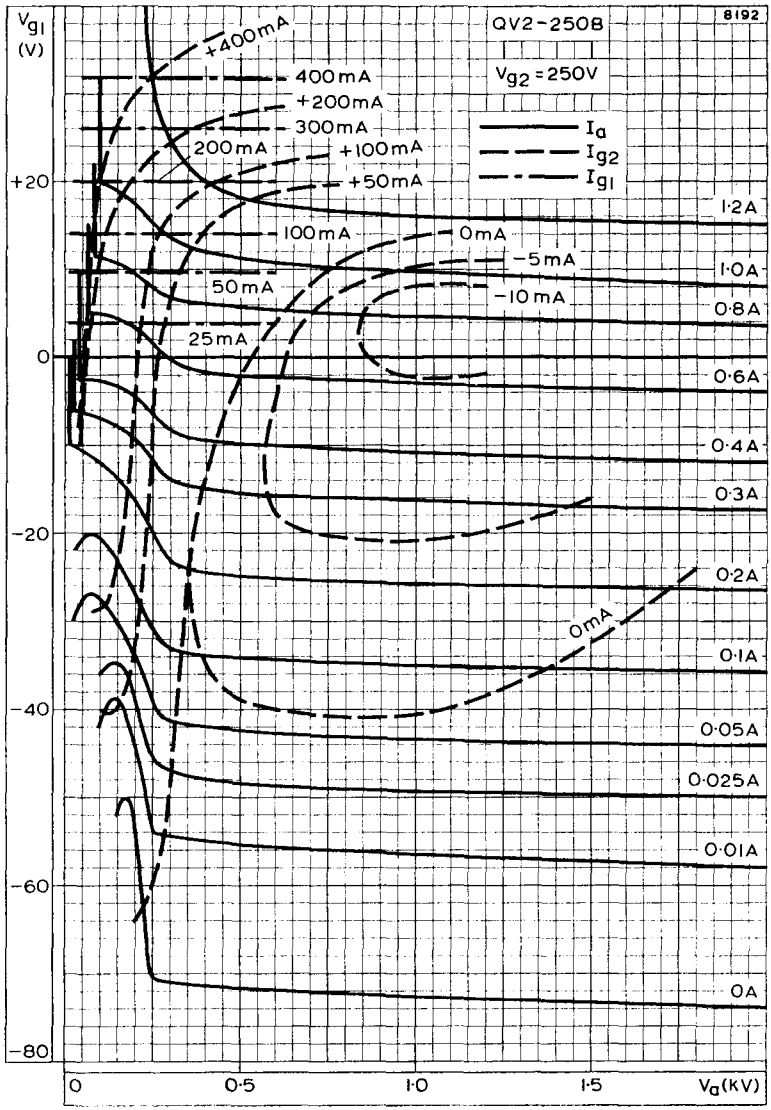

CONSTANT CURRENT CURVES