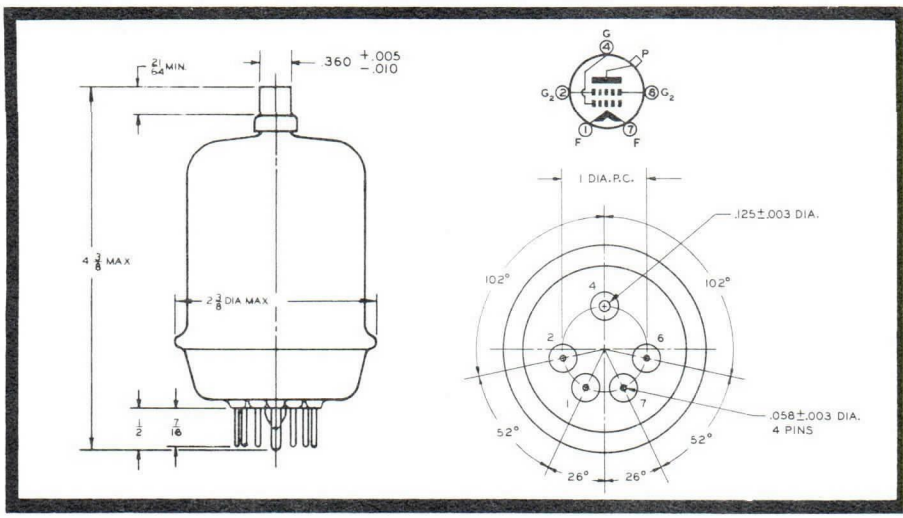

PL-8165/ 4-65A

Power Tetrode

The PL-8165/4-65A is a 65-watt power tetrode suitable for use as an r-f power amplifier and oscillator, and as an a-f power amplifier and modulator. Because of its compact size and quick-heating thoriated-tungsten filament, the PL-8165/4-65A is especially useful in mobile communications equipment. The tube can be operated at full input at frequencies up to 150 Mc.

ELECTRICAL CHARACTERISTICS

Filament -- Thoriated Tungsten	
Voltage	6.0 volts
Current	3.5 amperes
Grid-Screen Amplification Factor	5
Interelectrode Capacitances	
Grid-Plate	.08 μμfd.
Input	7.5 μμfd.
Output	2.2 μμfd.
Transconductance (500 v. Eb, 125 ma. Ib, 250 v. Ec2)	4000 μmhos

MECHANICAL CHARACTERISTICS

Base[1]	5-pin Septar
Maximum Overall Dimensions	
Length	4.38 inches
Diameter	2.38 inches
Mounting Position	Vertical, base up or down

MAXIMUM RATINGS — C C S (Continuous Commercial Service)

	Class C CW or FM	Class C Telephony	
D-C Plate Voltage	3000	2500	max. volts
D-C Screen-Grid Voltage	600	400	max. volts
D-C Plate Current	150	120	max. ma.
Screen-Grid Input	10	10	max. watts
Plate Dissipation	65	45	max. watts

[1] Fits E. F. Johnson Co. No. 122-101 or 122-247 sockets.

27 January 1964

PENTA LABORATORIES, INC.
312 NORTH NOPAL STREET • SANTA BARBARA, CALIFORNIA

PL-8165/4-65A

TYPICAL OPERATION — Class-C CW or FM Amplifier

Grounded Cathode Circuit

D-C Plate Voltage	1000	1500	2000	3000	volts
D-C Screen-Grid Voltage	250	250	250	250	volts
D-C Control-Grid Voltage	-80	-85	-90	-100	volts
D-C Plate Current	150	150	140	115	ma.
D-C Screen-Grid Current	40	40	40	22	ma.
D-C Control-Grid Current	17	18	11	10	ma.
Peak R-F Grid Voltage (approx.)	175	180	190	170	volts
Driving Power (approx.)	3.0	3.2	2.1	1.7	watts
Plate Power Input	150	225	280	345	watts
Plate Dissipation	55	60	65	65	watts
Plate Power Output	95	165	215	280	watts

TYPICAL OPERATION — Class-C Amplitude-Modulated Amplifier, Carrier Conditions

Grounded-Cathode Circuit

D-C Plate Voltage	1000	1500	2000	2500	volts
D-C Screen-Grid Voltage	250	250	250	250	volts
D-C Control-Grid Voltage	-125	-125	-130	-135	volts
D-C Plate Current	120	120	120	110	ma.
D-C Screen-Grid Current	40	40	40	25	ma.
D-C Control-Grid Current	16	16	16	12	ma.
Peak R-F Grid Voltage (approx.)	220	220	225	215	volts
Driving Power (approx.)	3.5	3.5	3.6	2.6	watts
Plate Power Input	120	180	240	275	watts
Plate Dissipation	30	40	45	45	watts
Plate Power Output	90	140	195	230	watts