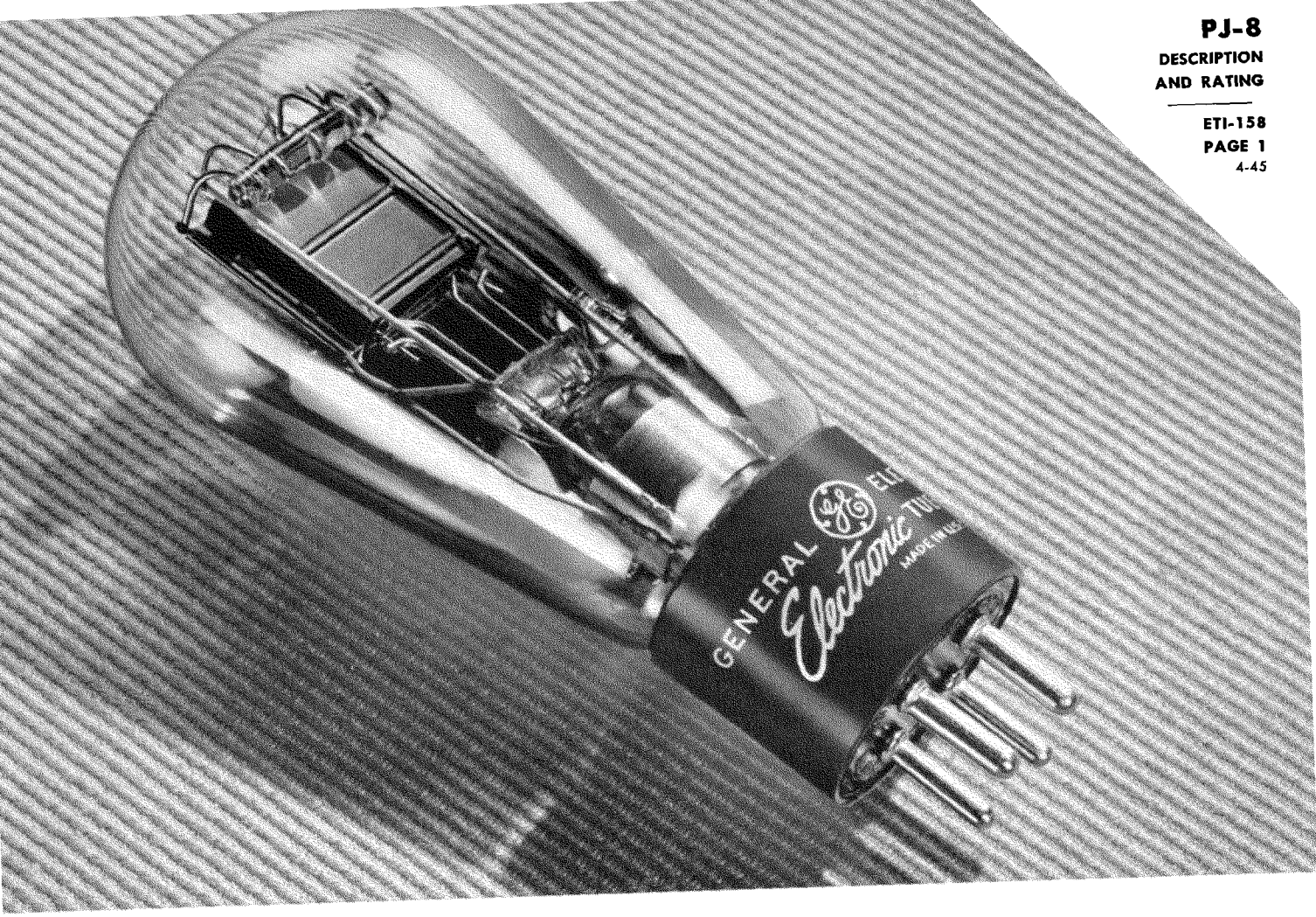

PLIOTRON

DESCRIPTION

The PJ-8 is a high-vacuum tube designed for use in amplification and relay applications. The low grid power and uniformity of characteristics are particularly valuable in many control applications.

TECHNICAL INFORMATION

These data are for reference only. For design information refer to specifications.

GENERAL CHARACTERISTICS

Number of electrodes	3	
Electrical		
Filament voltage	4.5	volts
Filament current	1.1	amperes
Average characteristics when $E_b = 350$ volts, $I_b = 19$ milliamperes, $E_f = 4.5$ volts d-c		
Grid voltage	−20	volts
Amplification factor	8.5	
Grid-plate transconductance	1330	micromhos
Direct interelectrode capacitance		
Grid-plate	8.3	micromicrofarads
Grid-cathode	4.0	micromicrofarads
Plate-cathode	3.0	micromicrofarads

Electronic TUBE

GENERAL ELECTRIC

TECHNICAL INFORMATION (CONT'D)

Mechanical

Base	medium 4-pin bayonet
Net weight, approx.	3 ounces
Shipping weight, approx.	3 pounds
Operating position	vertical or horizontal with plane of electrodes vertical

MAXIMUM RATINGS AND TYPICAL OPERATING CONDITIONS

CLASS A AUDIO-FREQUENCY AMPLIFIER AND MODULATOR

	Typical Operation	Maximum Ratings	
D-c plate voltage	350	350	volts
Plate dissipation	....	7.5	watts
D-c grid voltage	−30	....	volts
Peak grid swing, approx.	30	....	volts
D-c plate current	9	....	milliamperes
Plate resistance	8700	....	ohms
Load resistance	18,000	....	ohms
Plate power output, 5% second harmonic	0.6	....	watts

CLASS B RADIO-FREQUENCY POWER AMPLIFIER

Carrier conditions per tube for use with a maximum modulation factor of 1.0

D-c plate voltage	350	350	volts
D-c grid voltage	−40	....	volts
D-c plate current	32	40	milliamperes
Plate input	....	14	watts
Plate dissipation	....	10	watts
Peak r-f grid input	90	....	volts
†Driving power, approx.	0.1	....	watts
Output, approx.	2	....	watts

CLASS C RADIO-FREQUENCY POWER AMPLIFIER AND OSCILLATOR, PLATE MODULATED

Carrier conditions per tube for use with a maximum modulation factor of 1.0

D-c plate voltage	300	350	volts
D-c grid voltage	−100	−150	volts
D-c plate current	30	40	milliamperes
D-c grid current, approx.	2	10	milliamperes
Plate input	....	14	watts
Plate dissipation	....	7	watts
Peak r-f grid input voltage, approx	140	....	volts
Driving power, approx.	0.3	....	watts
Plate power output	4	....	watts

CLASS C RADIO-FREQUENCY POWER AMPLIFIER AND OSCILLATOR

*Key-down conditions per tube without modulation**

D-c plate voltage	350	350	volts
D-c grid voltage	−80	−150	volts
D-c plate current	35	40	milliamperes
D-c grid current, approx.	2	10	milliamperes
Plate input	....	14	watts
Plate dissipation	....	10	watts
Peak r-f grid input voltage, approx	130	....	volts
Driving power, approx.	0.25	....	watts
Plate power output, approx.	6	....	watts

†At crest of audio-frequency cycle.
*Modulation, essentially negative, may be used if the positive peak of the audio-frequency envelope does not exceed 115 per cent of the carrier conditions.

APPLICATION NOTES

The PJ-8 can be operated at frequencies as high as six megacycles, and may be operated at higher frequencies provided the maximum values of plate voltage and power input are reduced as the frequency is raised (other maximum ratings are the same as shown under TECHNICAL INFORMATION). The tabulation below shows highest percentage of maximum plate voltage and power input that can be used up to thirty megacycles for the various classes of service. Special attention should be given to adequate ventilation of the bulb at these frequencies.

Frequency	6	15	30	megacycles
Class B, r-f	100	85	70	per cent
Class C, plate modulated or unmodulated	100	75	50	per cent

The normal value of grid leak, when the PJ-8 is used as an oscillator or r-f power amplifier (Class C), is in the neighborhood of 10,000 ohms, although this may be replaced by a suitable fixed bias. If self-bias is used, the cathode should be approximately 2000 ohms.

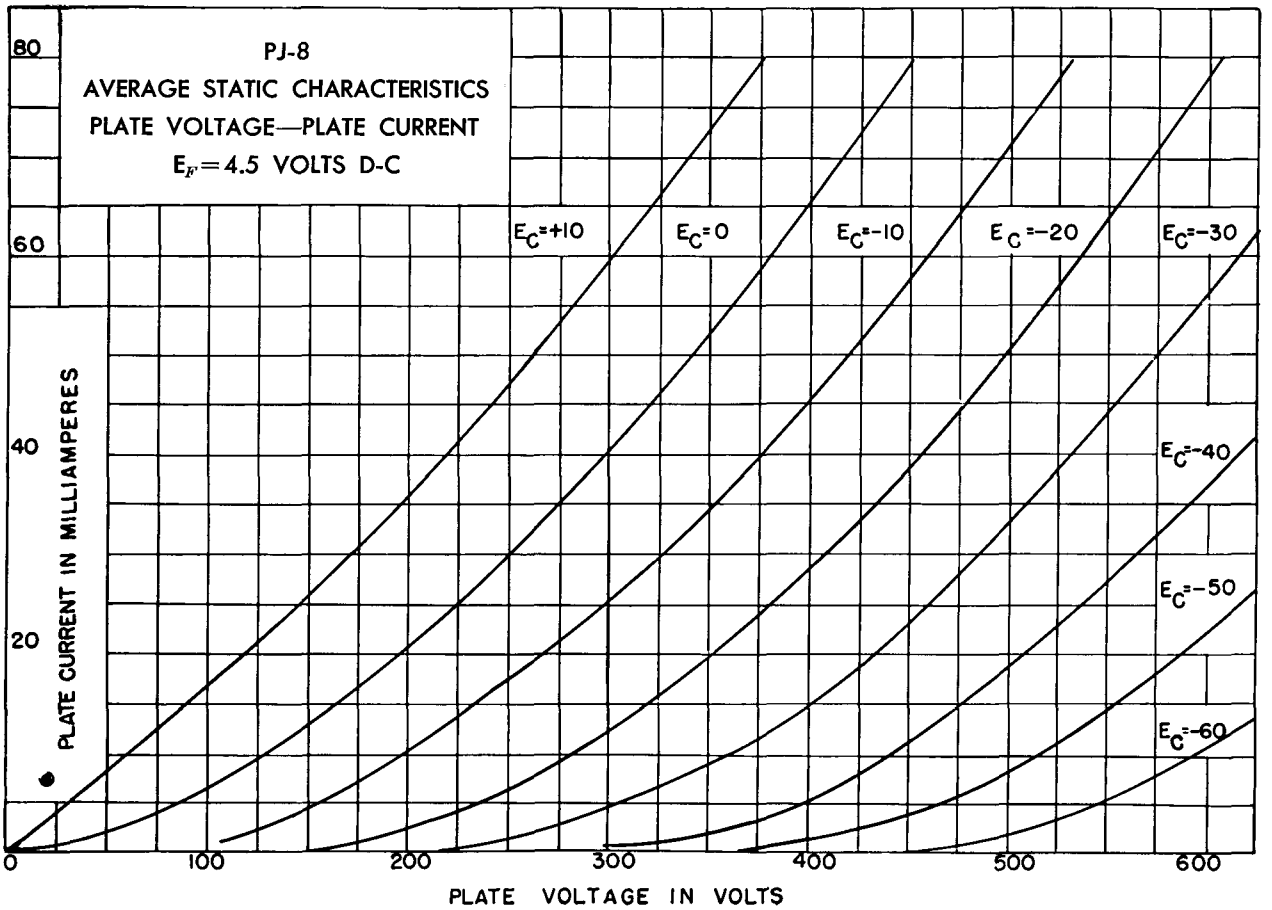

K-9033567

12-18-44

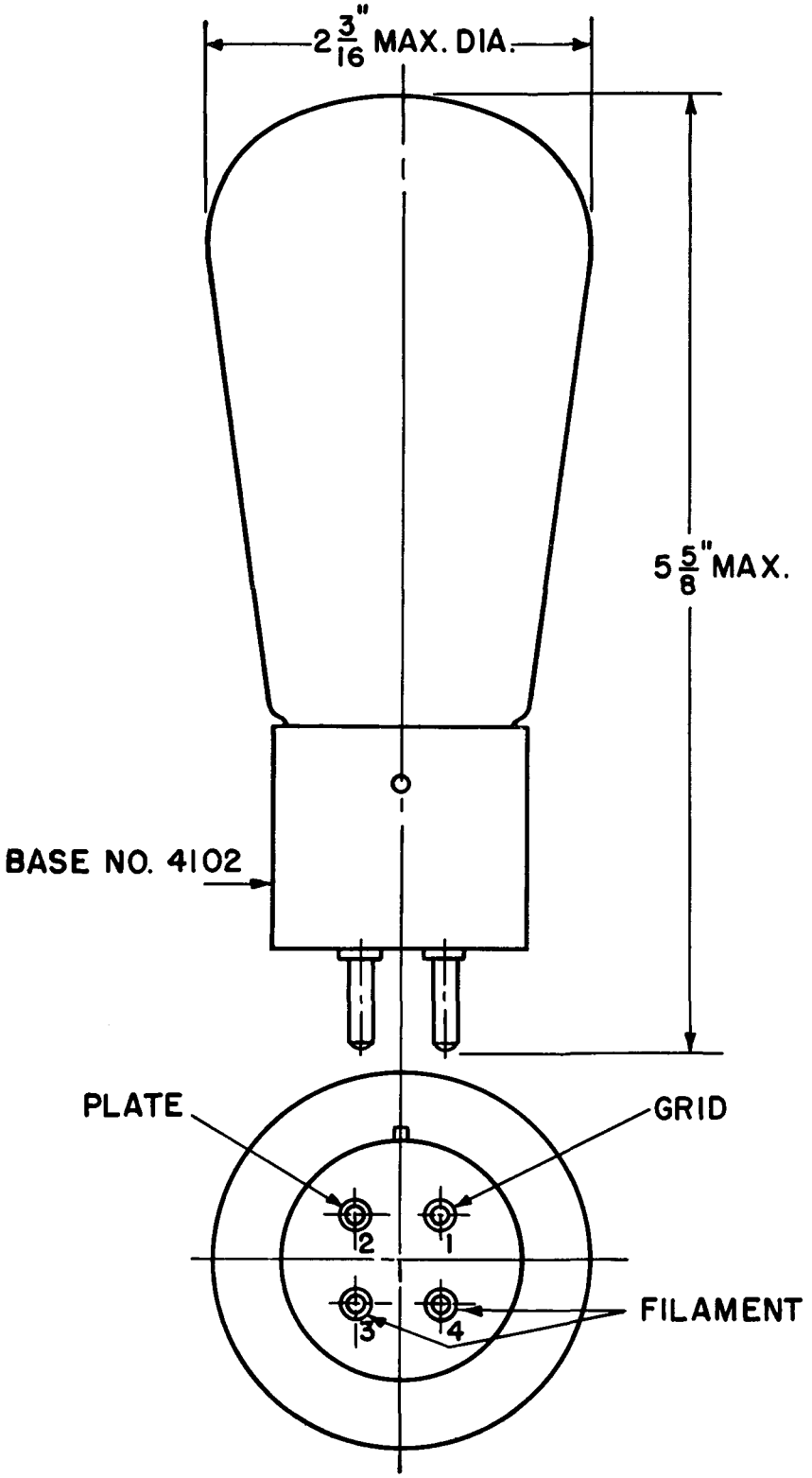

K-3846047

6-9-44

OUTLINE PJ-8 PLIOTRON

Electronics Department

GENERAL ELECTRIC

Schenectady, N. Y.

4-45 (4M)
Filing No. 8850