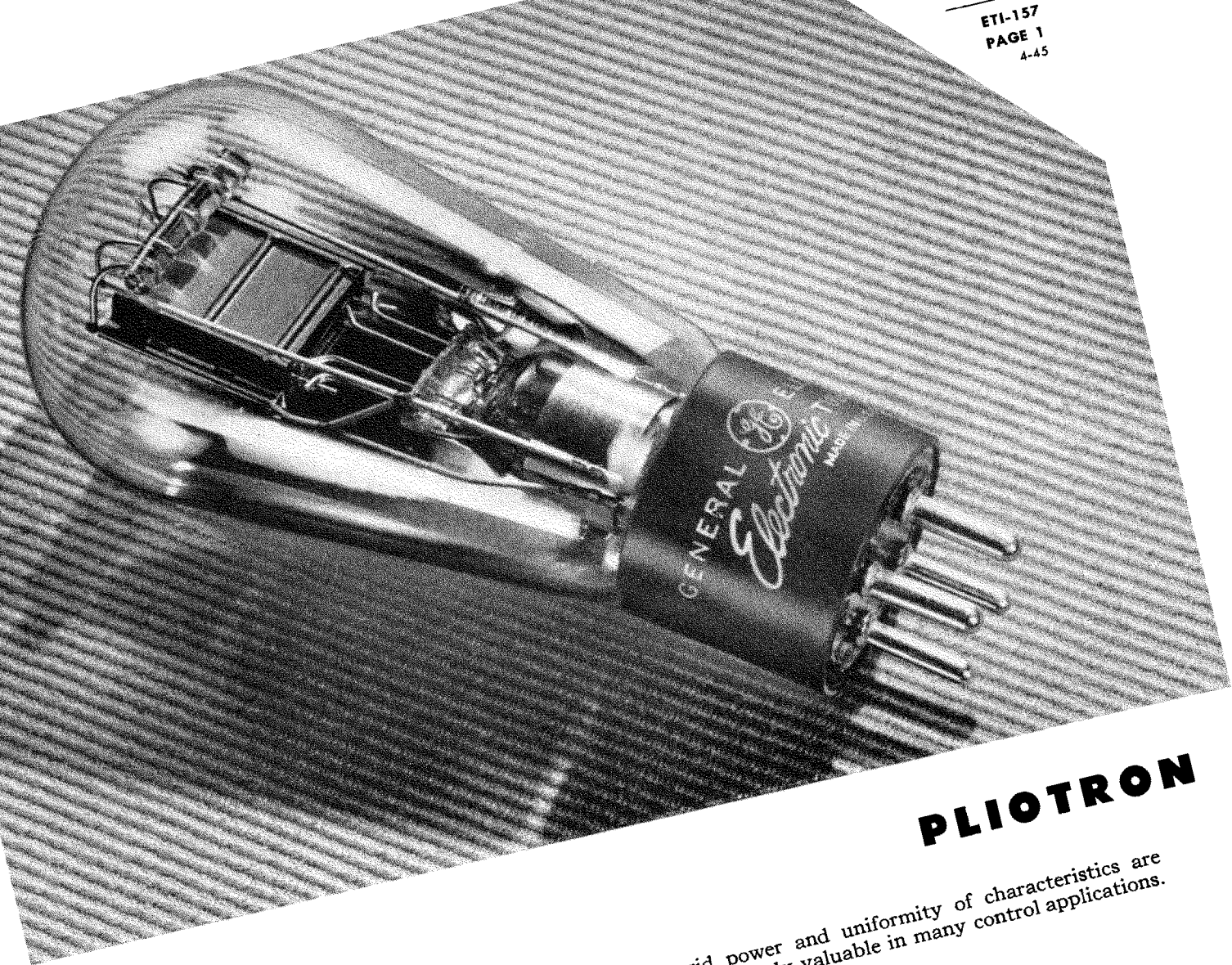

PLIOTRON

DESCRIPTION

The PJ-7 is a high-vacuum tube designed for use in amplification and relay applications. The low grid power and uniformity of characteristics are particularly valuable in many control applications.

TECHNICAL INFORMATION

These data are for reference only. For design information refer to specifications.

GENERAL CHARACTERISTICS

Number of electrodes	3

Electrical

Filament voltage	4.5 volts
Filament current	1.1 amperes
Average characteristics when $e_b = 350$ volts, $i_b = 4.5$ milliamperes, $e_f = 4.5$ volts d-c	
Grid voltage	−4 volts
Amplification factor	30
Grid-plate transconductance	1120 micromhos
Direct interelectrode capacitance	
Grid-plate	8.5 micromicrofarads
Grid-cathode	3.0 micromicrofarads
Plate-cathode	4.0 micromicrofarads

GENERAL ELECTRIC

TECHNICAL INFORMATION (CONT'D)

Mechanical

Base	medium 4-pin bayonet
Net weight, approx.	2 ounces
Shipping weight, approx	3 pounds
Operating position	vertical or horizontal with plane of electrodes vertical

MAXIMUM RATINGS AND TYPICAL OPERATING CONDITIONS

CLASS A AUDIO-FREQUENCY AMPLIFIER AND MODULATOR

	Typical Operation	Maximum Ratings	
D-c plate voltage	350	350	volts
Plate dissipation	....	7.5	watts
D-c grid voltage	−6	....	volts
Peak grid swing, approx.	6	....	volts
D-c plate current	2.8	....	milliamperes
Load resistance	40,000	....	ohms
Plate power output, less than 5% second harmonic	58	....	volts

CLASS B RADIO-FREQUENCY POWER AMPLIFIER

Carrier conditions per tube for use with a maximum modulation factor of 1.0

D-c plate voltage	350	350	volts
D-c grid voltage	−10	....	volts
D-c plate current	32	35	milliamperes
R-f grid current	....	2.5	amperes
Plate dissipation	9	10	watts
Output, approx.	2	....	watts

CLASS C RADIO-FREQUENCY POWER AMPLIFIER AND OSCILLATOR, PLATE MODULATED

Carrier conditions per tube for use with a maximum modulation factor of 1.0

D-c plate voltage	300	300	volts
D-c grid voltage	−40	−100	volts
D-c plate current	35	40	milliamperes
D-c grid current, approx.	8	15	milliamperes
R-f grid current	....	2	amperes
Plate dissipation	5.5	10	watts
Plate power output, approx.	5	....	watts

CLASS C RADIO-FREQUENCY POWER AMPLIFIER AND OSCILLATOR

*Key-down conditions per tube without modulation**

D-c plate voltage	350	350	volts
D-c grid voltage	−25	−100	volts
D-c plate current	35	40	milliamperes
D-c grid current, approx.	5	15	milliamperes
R-f grid current	....	3	amperes
Plate dissipation	6	10	watts
Plate power output, approx.	6	....	watts

* Modulation, essentially negative, may be used if the positive peak of the audio-frequency envelope does not exceed 115 per cent of the carrier conditions.

APPLICATION NOTES

The PJ-7 can be operated at frequencies as high as six megacycles, and may be operated at higher frequencies provided the maximum values of plate voltage and power input are reduced as the frequency is raised (other maximum ratings are the same as shown above). The tabulation below shows the highest percentage of maximum plate voltage and power input that can be used up to 170 megacycles for the various classes of service. Special attention should be given to adequate ventilation of the bulb at these frequencies.

Frequency	6	45	170	megacycles
Class B, r-f	100	75	50	per cent
Class C, plate modulated or unmodulated	100	75	50	per cent

The normal value of grid leak, when the tube is used as an oscillator or r-f power amplifier (Class c), is in the neighborhood of 5000 ohms, although this may be replaced by a suitable fixed bias. If self-bias is used, the cathode resistor should be approximately 600 ohms.

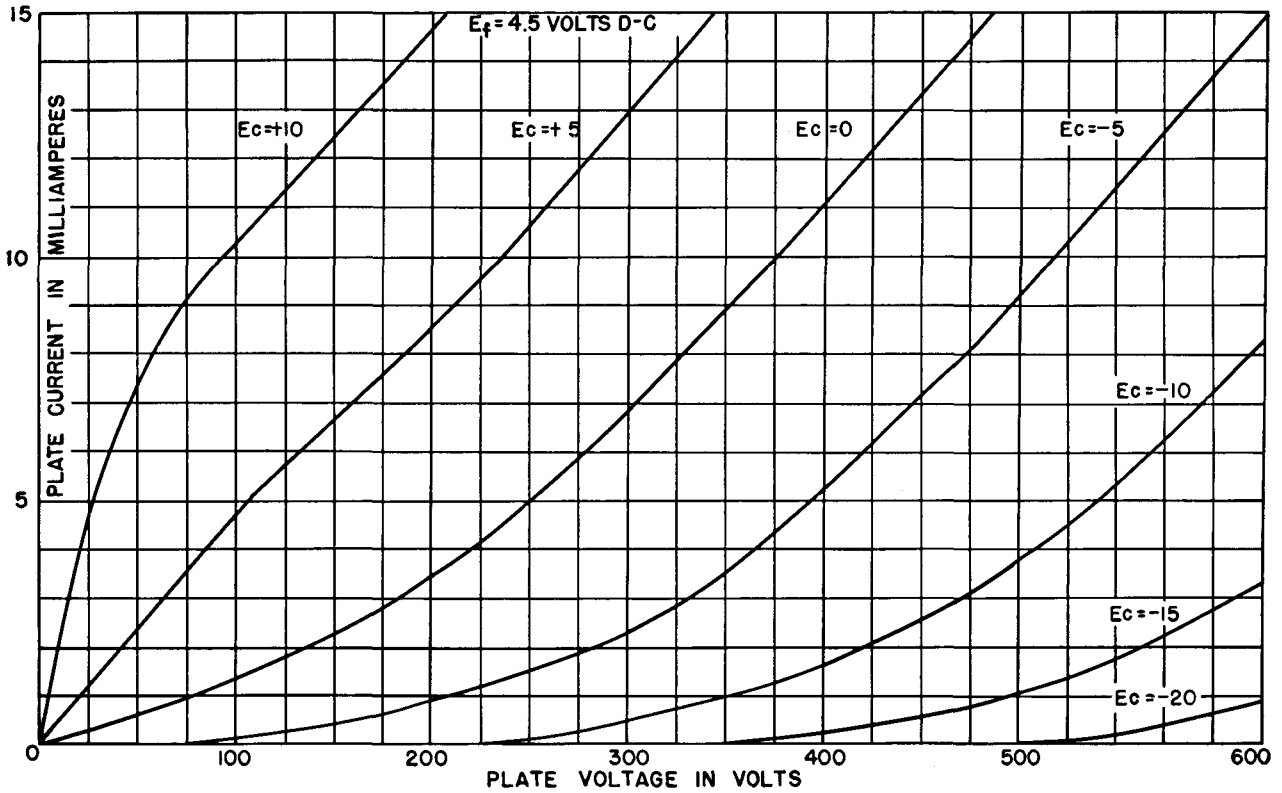

K-8639682

11-13-44

PJ-7 AVERAGE STATIC CHARACTERISTICS

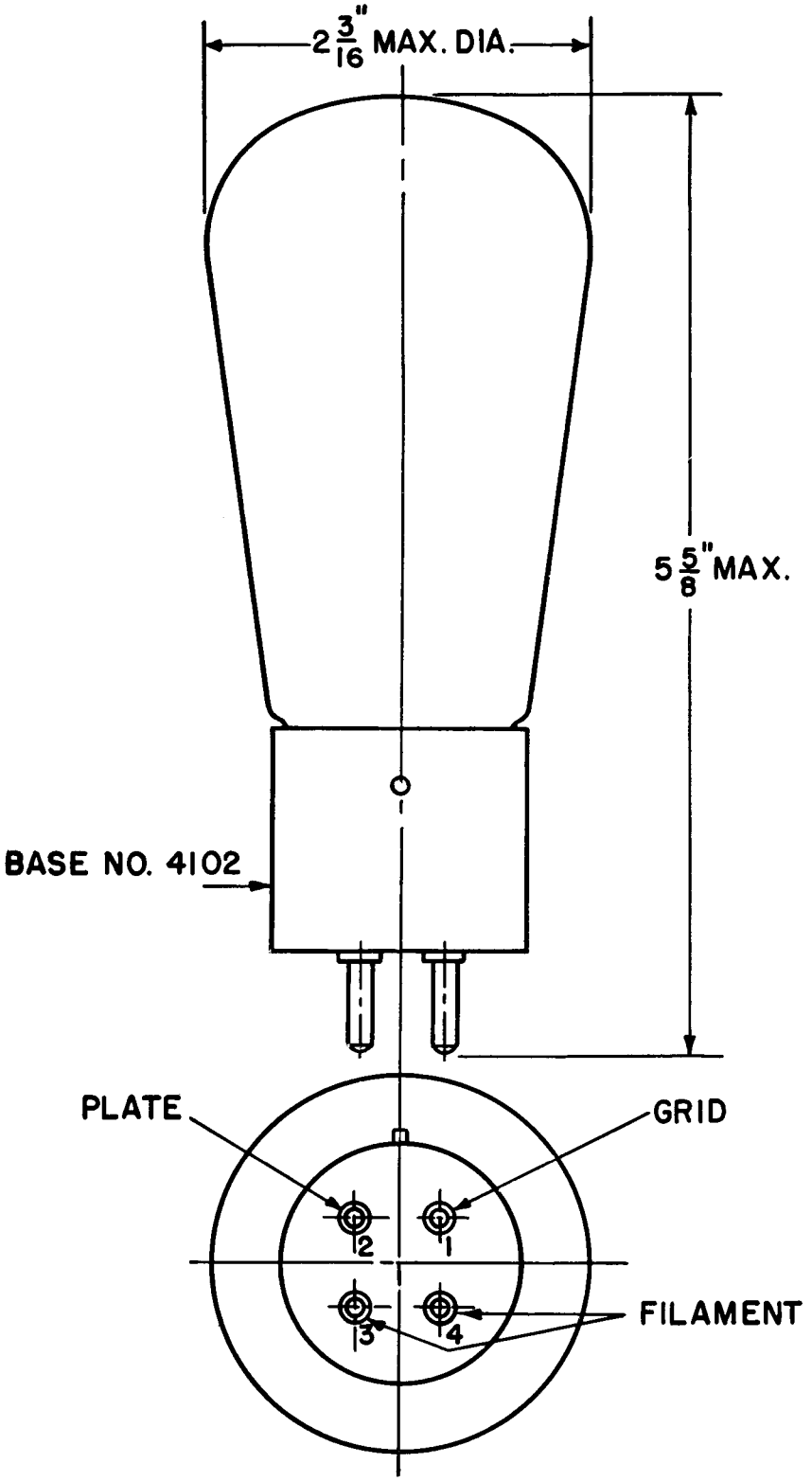

OUTLINE PJ-7 PLIOTRON

Electronics Department

GENERAL ELECTRIC

Schenectady, N. Y.