NL-950 AND NL-950S NUMERICAL READOUT TUBES

NL-950 is an ultra-long life cold cathode numerical display tube. It displays characters 0 through 9 and an independently operable right or left hand decimal point.

The short seated height (1.350″ max.) and small diameter make this tube ideal for use in smaller modern digital intruments.

The **NL-950** is designed to operate equally well in the dc mode or in the high peak current low duty mode of strobe or time share.

The **NL-950S** is identical to the NL-950 with the leads cut to 0.175″ ± .015″ for use with the RTS-44 socket.

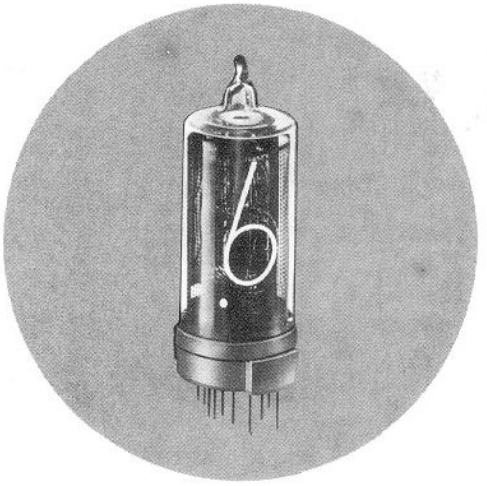

TECHNICAL INFORMATION

Ionization Voltage (Maximum)	170 Vdc
[1]Supply Voltage (Minimum)	170 Vdc
Cathode Current	
[2]Peak (Maximum) strobe only	20 ma
Average (Maximum)	5.0 mA
Average (Minimum)	2.3 mA
Decimal Point Current	
Average (Maximum)	0.5 mA
Average (Minimum)	0.1 mA
Prebias Limits	+ 60Vdc to +120Vdc
Temperature Limits	−20°C to +55°C
(Reduced Life)	−40°C to +70°C
Life (Dynamic)	200,000 Hours
Weight	0.3 oz.
Mounting Position	Vertical with pins 6 & 7 in front

Recommended Operating Conditions:

(a) No decimal point or decimal point operated only in conjunction with another character.

Supply Voltage (E_{bb})	170Vdc	200Vdc	250Vdc	300Vdc
Anode Resistor (Rp)	10KΩ	18KΩ	33KΩ	47KΩ

(b) When the decimal point is to be operated separately, with or without another character it is recommended an individual decimal point resistor be used in addition to the resistor in the anode circuit. See Figure 1.

Supply Voltage (E_{bb})	170Vdc	200Vdc	250Vdc	300Vdc
Anode Resistor (Rp)	10KΩ	18KΩ	33KΩ	47KΩ
Decimal Point Resistor (Rd)	100KΩ	180KΩ	330KΩ	470KΩ

Strobe or Time share Operation:

In typical strobed or time share application the same numeral cathodes of all the tubes are tied in parallel, and the anodes are strobed sequentially. See Figure 2. The strobing is above the visual flicker rate so the visual indication is normal. Since the "on" duty is 10% or less, a higher than normal peak current is used to provide for normal brightness. The NL-950 tubes are designed and constructed so no extraneous glow is visible under these high peak current conditions.

Using the tube voltage drop vs. peak anode current curves (Figure 4) the proper anode resistor for any particular supply voltage can be calculated.

Note: [1]Use of the highest voltage available with the appropriate resistor is recommended.

[2]Maximum pulse duration 5 milliseconds with maximum duty cycle of 10%.

Printed in U.S.A. 5/69

NATIONAL ELECTRONICS, INC.
a varian subsidiary
GENEVA, ILLINOIS, 60134
TELEPHONE 312 232-4300
TWX 910 237-1685

NL-950 AND NL-950S NUMERICAL READOUT TUBES

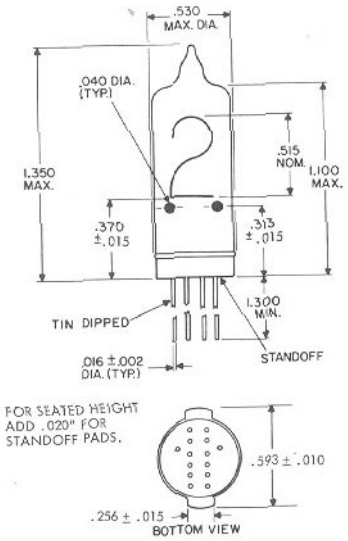

OUTLINE DRAWING

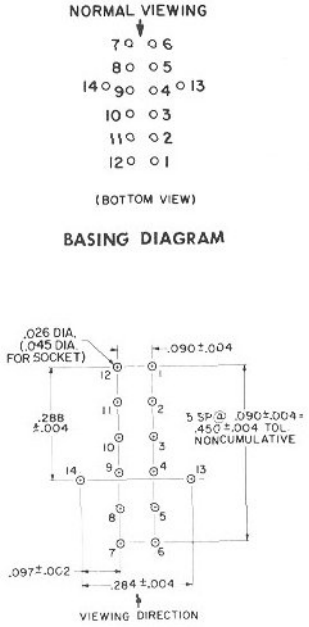

BASING DIAGRAM

PRINTED CIRCUIT MOUNTING HOLE LAYOUT TOP VIEW

Pin	Connections
1	NUMERAL 1
2	NUMERAL 2
3	NUMERAL 3
4	NUMERAL 4
5	NUMERAL 5
6	NUMERAL 6
* 7	ANODE
8	NUMERAL 7
9	NUMERAL 8
*10	ANODE
11	NUMERAL 9
12	NUMERAL 0
13	RT. DEC. PT.
14	LFT. DEC. PT.

*Connected internally.

PIN CONNECTIONS

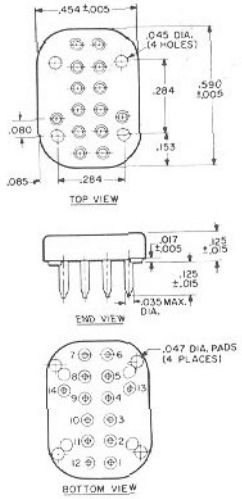

RTS-44 SOCKET

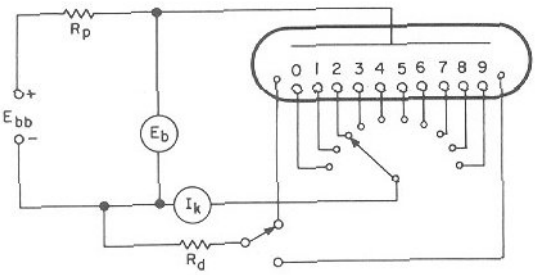

FIGURE 1

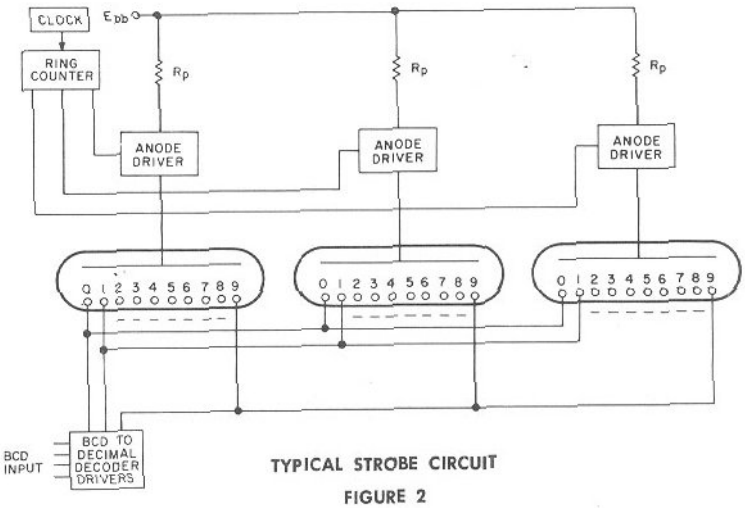

TYPICAL STROBE CIRCUIT

FIGURE 2

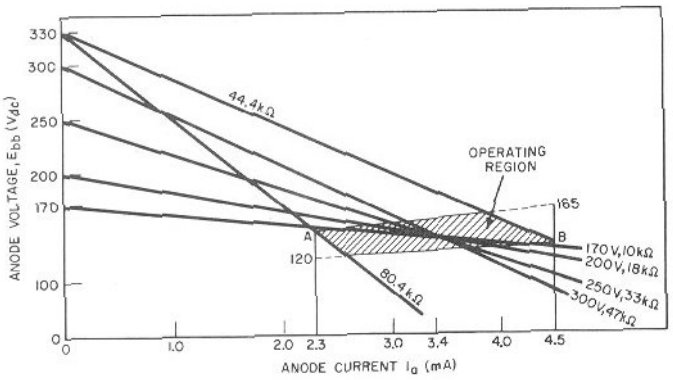

TUBE CHARACTERISTICS – dc

FIGURE 3

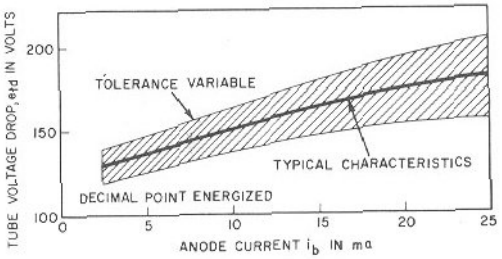

TUBE CHARACTERISTICS — STROBE

FIGURE 4

NATIONAL ELECTRONICS, INC.

a varian subsidiary

GENEVA, ILLINOIS, 60134

TELEPHONE 312 232-4300
TWX 910 237-1685