RECTIFIER TUBE

NL-618
INERT-GAS-FILLED RECTIFIER TUBE
6.4 Amperes dc

NATIONAL POWER TUBE NL-618 is a sturdy rectifier tube designed especially for industrial power rectifier and control applications. It is xenon-filled for efficiency, compactness, and the ability to operate within very wide temperature limits. NL-618 utilizes a No. 412 Industrial 4-pin base. It is available with a bracket base for panel mounting under the type number NL-618P, also with the new NATIONAL-designed lug type base under type number NL-618L.

NATIONAL ELECTRONICS, INC.

GENEVA, ILLINOIS, U. S. A.

NL-618 RECTIFIER TUBE
TECHNICAL INFORMATION

dc Amperes output (maximum)	6.4
Instantaneous Amperes output (maximum)	40
Maximum time of averaging anode current (seconds)	20
Maximum peak inverse volts	900
Max. commutation factor (V/u sec. x A/u sec.)	0.66
Filament volts	2.5
Filament amperes	18 ± 2
Filament heating time (seconds)	60
Typical arc drop at 20 amperes peak (volts)	9
Typical Anode starting voltage (volts)	20
Maximum ac short circuit current (amperes)	770
Ambient temperature limits (°C)	— 55 to + 75
Mounting position	Any
Net Weight (ounces)	6
Approx. shipping weight (lbs.)	4

Note: Max. base shell to lead voltage, 1500 Vrms.

ALL DATA ARE BASED ON RETURNS TO FILAMENT TRANSFORMER CENTER TAP

LIGHT FILAMENT BEFORE APPLYING LOAD

OUTLINE DRAWING
NL-618

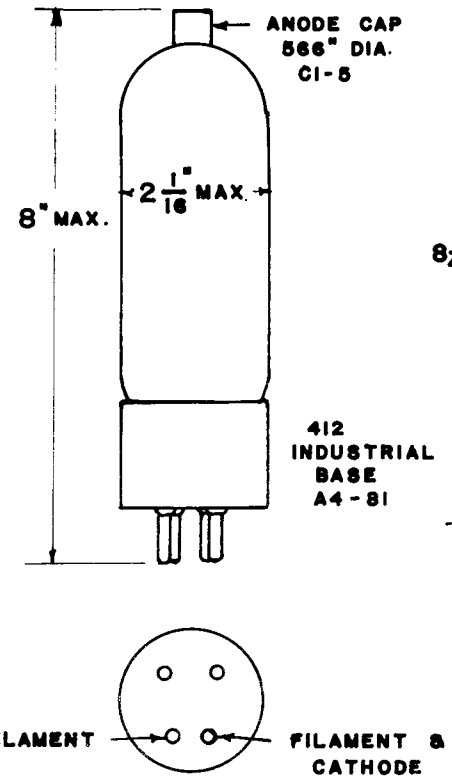

OUTLINE DRAWING
NL-618L

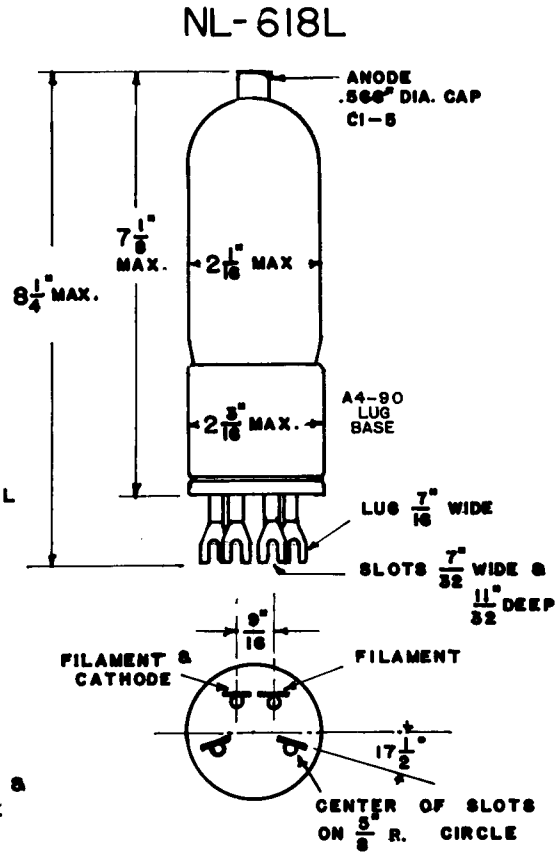

OUTLINE DRAWING
NL-618P

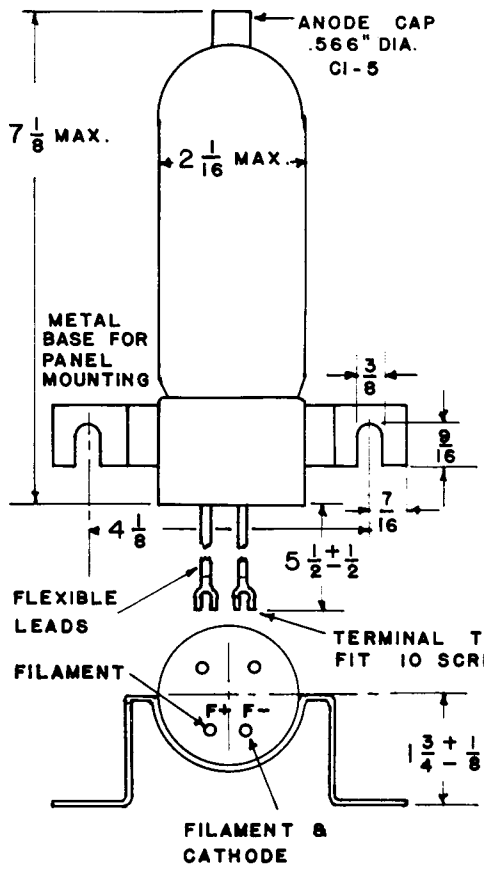

Printed in USA 10/57

NATIONAL ELECTRONICS, INC.
GENEVA, ILLINOIS, U. S. A.