# THYRATRON TUBE

**NL-5684/C3J/A**
**THYRATRON TUBE**
**2.5 Amperes dc -- 30 Amperes Peak**

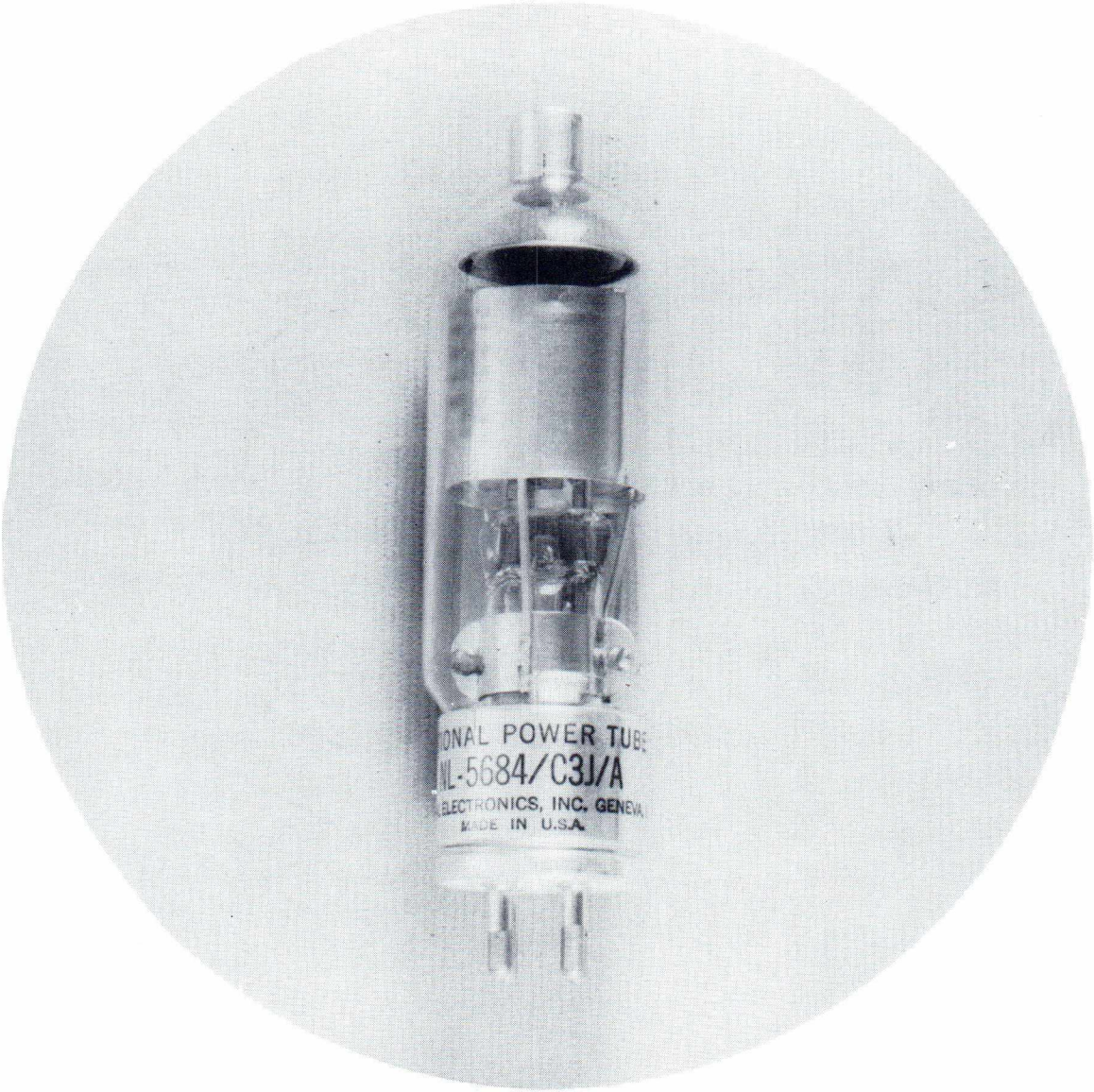


NATIONAL POWER TUBE NL-5684/C3J/A is a quick-heating, ruggedly constructed thyratron designed for timing, control and other industrial applications. It is xenon filled for quick starting characteristics and operation within wide temperature limits.


NATIONAL ELECTRONICS, INC.
GENEVA, ILLINOIS, U. S. A.

# NL-5684/C3J/A THYRATRON TUBE
# TECHNICAL INFORMATION

| | |
|---|---|
| dc Amperes output (maximum) | 2.5 |
| Instantaneous Amperes output (maximum) | 30 |
| Maximum time of averaging anode current (seconds) | 4.5 |
| Maximum peak inverse volts | 1250 |
| Maximum peak forward volts | 1000 |
| Max. Commutation Factor (V/usec x V/usec) at a max. initial inverse voltage of 350 volts | 0.66 |
| Filament volts | 2.5 |
| Filament amperes | 9 ± 2 |
| Heating time (seconds) | 30 |
| Typical arc drop at 10 amperes peak (volts) | 10 |
| Grid control characteristic | see curve |
| Maximum negative grid voltage before conduction (volts) | 100 |
| Maximum negative grid voltage during conduction (volts) | 10 |
| Ionization time (approx., microseconds) | 10 |
| Deionization time (approx., microseconds) | 1000 |
| Anode to grid capacitance (uuf) | 2 |
| Maximum critical grid current (microamperes) | 10 |
| Maximum ac short circuit current (amperes) | 300 |
| Ambient temperature limits (°C) | —55 to +75 |
| Mounting position | any |
| Net weight (ounces) | 3 |
| Approx. shipping weight (lbs.) | 3 |

ALL DATA ARE BASED ON RETURNS TO FILAMENT TRANSFORMER CENTER TAP

***LIGHT FILAMENT BEFORE APPLYING LOAD***

## OUTLINE DRAWING

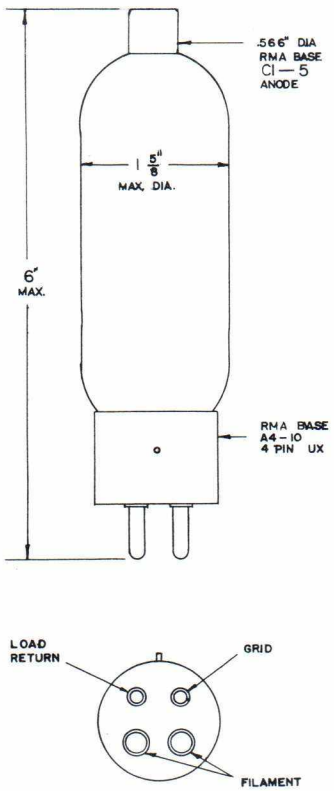


## GRID CHARACTERISTIC

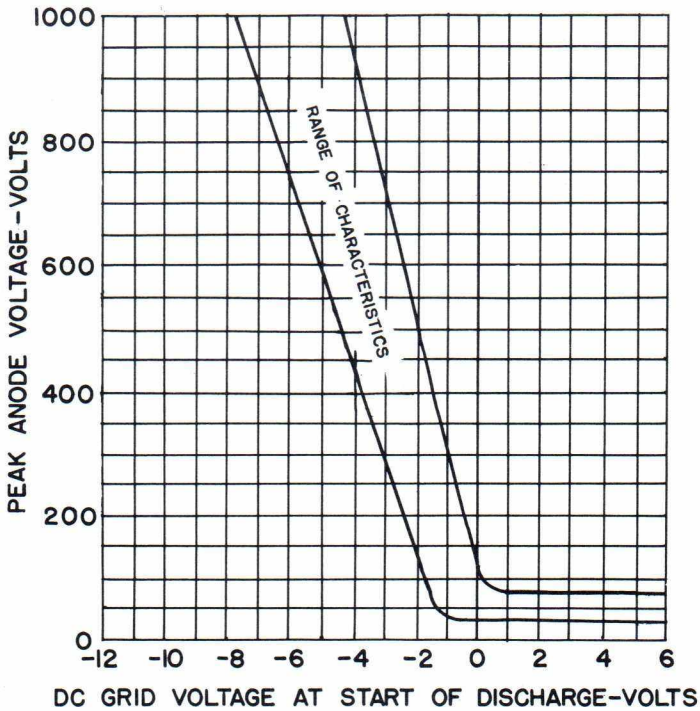


Printed in USA 8-57 G

NATIONAL ELECTRONICS, INC.
GENEVA, ILLINOIS, U. S. A.