NL-1054 IGNITRON

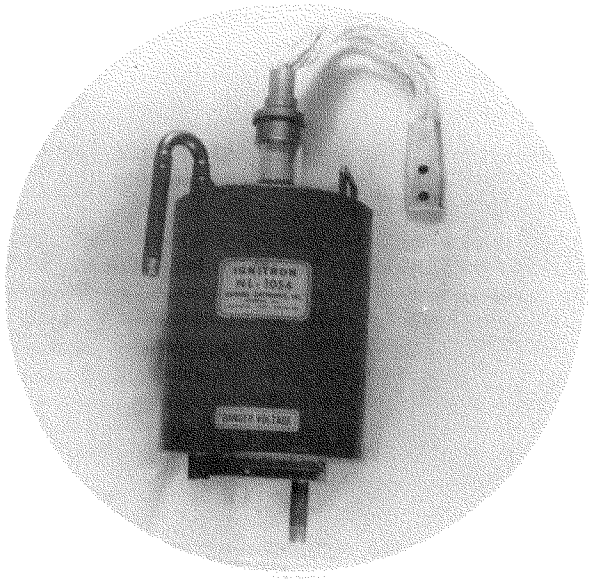

SIZE E

900 Amperes dc

National Ignitron NL-1054 is a metal, water-cooled, mercury pool tube designed especially for welder and similar AC control applications. Its rating is approximately equivalent to a 2400 ampere magnetic contactor. NL-1054 internal cooling coil greatly increases the cooling surface giving long life and arc-back-free operation.

TECHNICAL INFORMATION

AC Control Applications — Ratings are based on full-cycle conduction (no phase delay) regardless of whether or not phase control is used, on frequencies from 25 to 60 cycles, and any voltage between 250 and 600 volts rms. Ratings are for two tubes in inverse parallel.

[1]Maximum demand — kva	4800*
[1]Corresponding maximum average anode current per tube, amps DC	486
[1]Maximum average anode current per tube — amps DC	900
[1]Corresponding maximum demand — kva	1600
[1]Maximum averaging time — seconds	
at 500 volts rms.	8.9
at 250 volts rms.	17.8
Maximum surge current — peak amps	280% of max. rms demand current

[2]Rectifier Applications — Ratings are based on intermittant duty, on full-cycle conduction (no phase delay), and on frequencies from 50 to 60 cycles. When phase control is used, current ratings are reduced as per phase control current rating curve. Values are for one tube.

Max. peak anode volts	600	1200	1500
Max. peak anode current, amps.	8000	6000	4800
Corres. max. ave. anode current, amps. DC	160	120	96
Max. ave. anode current, amps. DC	453	340	272
Corres. max. peak anode current, amps.	2718	2040	1632
Max. averaging time, sec.	12.5	12.5	12.5
Max. ratio of average to peak current, max. averaging time, 0.6 sec.	0.166	0.166	0.166
Max. ratio of peak surge current to peak anode current	12.5	12.5	12.5
Max. duration of surge current, sec.	0.15	0.15	0.15

Ignition Requirements — (Same for both applications.)

Ignitor Voltage

Maximum instantaneous allowed, ignitor positive	anode voltage
[3]Maximum instantaneous required, ignitor positive — volts	200
Maximum instantaneous allowed, ignitor negative — volts	5

Ignitor Current

Maximum instantaneous allowed — amperes	100
[3]Maximum instantaneous required — amperes	30
Maximum rms allowed — amperes	10
Maximum average allowed — ampere	1
[3]Ignitor ignition time maximum — microseconds	100
Ignitor current averaging time — seconds	5

Cooling Requirements — (Same for both applications.)

Type of cooling	Water
Minimum inlet water temperature, °C	0
Maximum outlet water temperature, °C	40
Approximate water flow required at continuous full load, GPM	6
At duty less than maximum % duty for any given demand current, water flow can be reduced in proportion to reduction in duty.	
Minimum water flow, at any load, GPM	1.5
Pressure drop per tube at 6 GPM — lbs. per sq. in.	16
Water temperature rise at 6 GPM — full load — °C	9

GENERAL CHARACTERISTICS

Number of anodes	1
Number of ignitors	1
Mounting position	Vertical
Peak arc drop at 6000 amperes peak — approximate volts	30
Net weight — lbs.	85
Approx. shipping weight — lbs.	105

[1]Using log-log paper, straight line interpolation of RMS Demand Current vs. Average Anode Current and Maximum Averaging Time vs. Anode Voltage may be used to determine intermediate ratings.

[2]Using log-log paper, straight line interpolation of Peak Anode Current vs. Average Anode Current may be used to determine intermediate ratings. See curves for details.

[3]Ignition will occur if either maximum required instantaneous potential is applied or maximum required instantaneous current flows for the rated maximum ignitor ignition time.

*Maximum demand current at voltages below 500 is 9600 amps rms.

Printed in USA 8-57 GR

NATIONAL ELECTRONICS, INC.
GENEVA, ILLINOIS, U. S. A.

NL-1054 IGNITRON

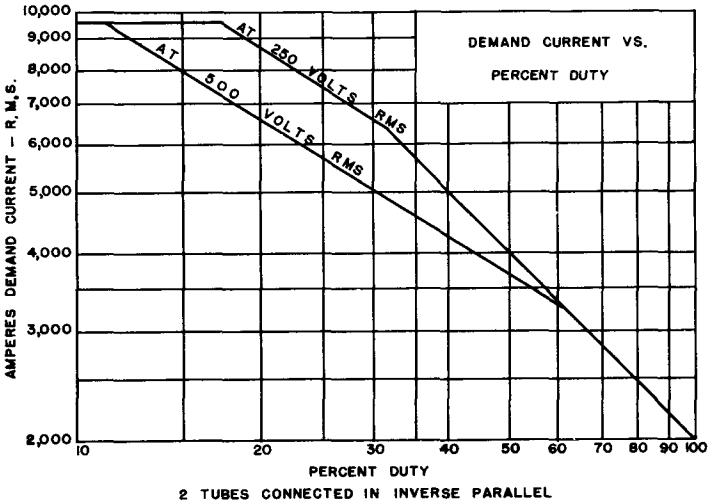

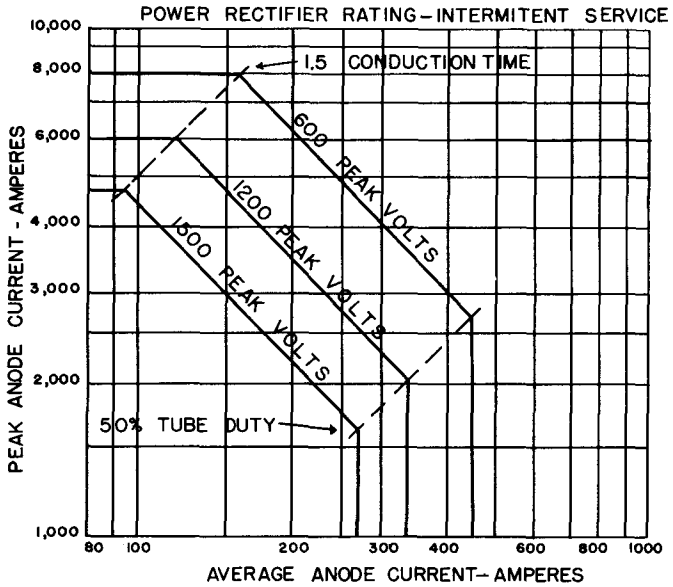

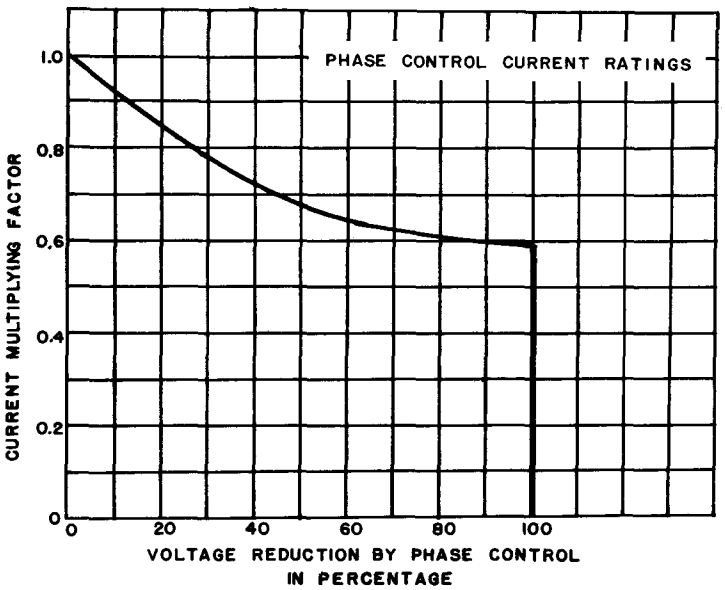

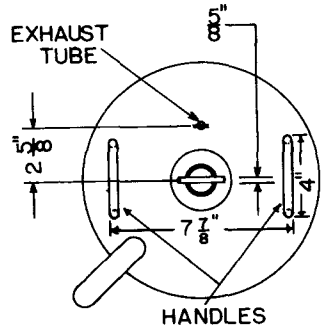

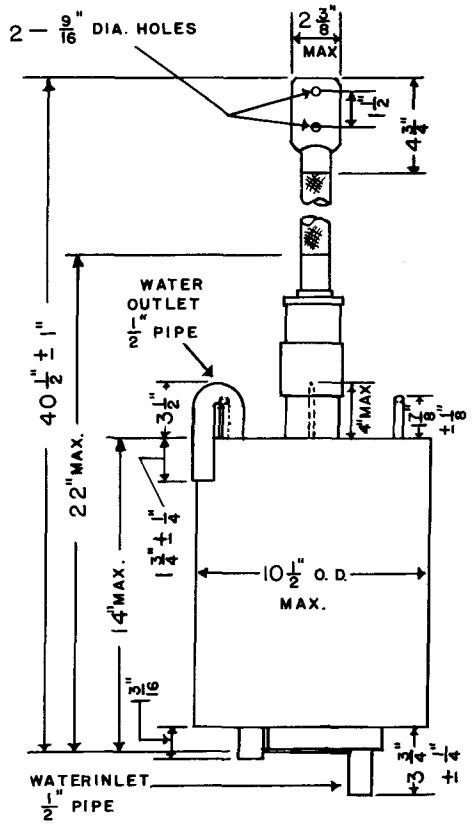

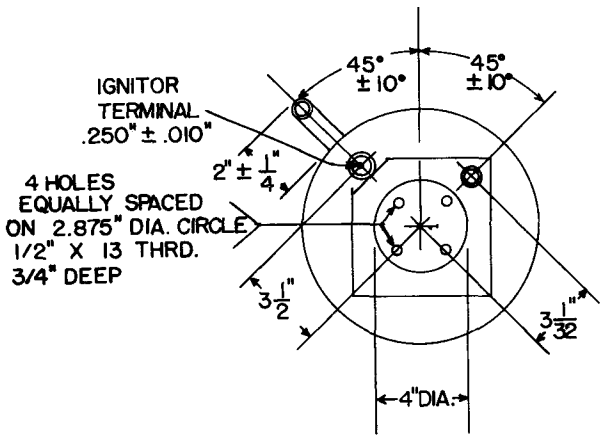

NATIONAL ELECTRONICS, INC.
GENEVA, ILLINOIS, U. S. A.