Ferranti

T. R. CELL

A broad band passive protection cell normally used in conjunction with pulsed attenuators or in radar systems where protection against random signals is not available.

The cell should be mounted in the receiver arm, between rectangular flanges for W.G.16.

PHYSICAL DATA.

Dimensions	See outline drawing overleaf.
Waveguide	W.G.16 (0·4″ × 0·9″).
Primer Terminal ...	CT.1.
Mounting Position ...	Any.

FREQUENCY RANGE ... 8950 to 9600 Mc/s.

RATINGS.

Max. Line Power level	10 kW.
*Max. Primer Supply Voltage ...	−1500 volts.
Min. Primer Supply Voltage ...	−950 volts.
*Max. Primer Current	150 μA.
*Min. Primer Current	100 μA.
Ambient Temperature Range (non-operating) ...	−40 to +100 °C.

CHARACTERISTICS.

	Average.	Limit.	
Low Power Level.			
Insertion Loss :— 8950 to 9600 Mc/s. ...	0·6	1·0	dB.
V.S.W.R.	1·15	1·25	dB.
High Power Level.			
Breakdown Power	120	200	mW.
Leakage at 40kW. peak :—			
Total Leakage Power ...	12	20	mW.
Spike Leakage Energy ...	0·12	0·2	ergs/pulse.
†Recovery Time (to 6dB. loss) ...	—	50	μSec.
Primer Characteristics.			
Primer Operating Voltage ...	200	180 to 280	volts.

*A suitable resistor should be connected in series with the electrode to limit the current to between 100 and 150 microamperes. At least 1 megohm should be connected directly to the primer electrode terminal.

†Measured at 10 kW.

Ferranti

Issue 2.
Sept., 1960

Ferranti

NF40

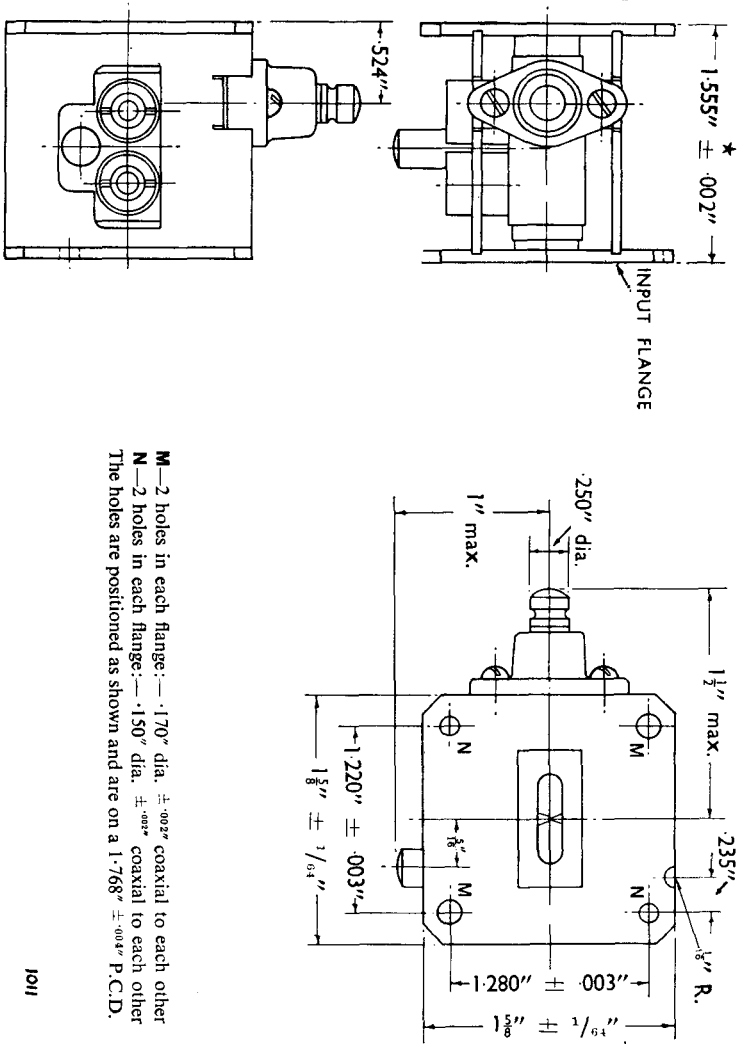

M—2 holes in each flange:—·170″ dia. ±·002″ coaxial to each other
N—2 holes in each flange:—·150″ dia. ±·002″ coaxial to each other
The holes are positioned as shown and are on a 1·768″ ±·004″ P.C.D.

1011