N1010A N1010S

BACKWARD WAVE OSCILLATORS

Service types CV2393 (N1010A), CV6024 (N1010S)

ABRIDGED DATA

O-type backward wave oscillators for wide band microwave receivers and oscillators, suitable for pulse or amplitude modulation.

Frequency range	7.0 to 11.5	GHz
Typical output power over band	40 to 130	mW

Integral focusing:

N1010A	permanent magnet
N1010S	solenoid
Output connector	50Ω type N coaxial

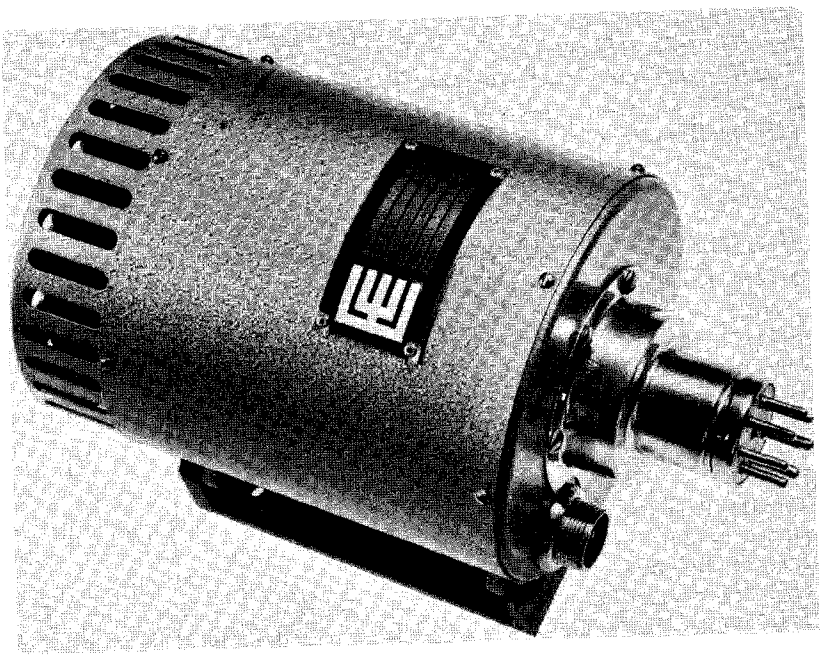

GENERAL

Electrical

Cathode	indirectly heated, oxide coated	
Heater voltage	6.3	V
Heater current	2.3	A
Cathode pre-heating time (minimum)	2.0	min
Inter-electrode capacitances:		
cathode to grid, anode and delay line	10	pF
grid to cathode, anode and delay line	15	pF
anode to cathode, grid and delay line	15	pF
delay line to cathode, grid and anode	10	pF
delay line to outer shell	300	pF
Solenoid power supply (N1010S)	24V, 4.5A	d.c.

Mechanical

Overall dimensions	see outline drawings
Net weight	11 pounds (5kg) approx
Mounting position (see note 1)	any
Base	medium 7-pin (JEDEC A7-13)
R.F. output connector	50Ω type N
Solenoid connector (N1010S)	AP208600/CV48992

Tubes are vibration tested to withstand normal service conditions.

Cooling (See note 2) . . . . . forced-air

MAXIMUM AND MINIMUM RATINGS (Absolute values) (See note 3)

No individual rating to be exceeded.

	Min	Max	
Heater voltage	5.7	6.8	V
Heater starting current (peak)	—	4.0	A
Grid voltage (see note 4)	0	−250	V
Delay line voltage	250	1700	V
Delay line current (see note 5)	—	40	mA
Delay line dissipation	—	50	W
Anode voltage (see note 6)	—	300	V
Anode current	—	10	mA
Body temperature	—	120	°C
Solenoid voltage (N1010S)	16	24	V
Solenoid current (N1010S)	3.0	7.0	A

RANGE OF CHARACTERISTICS AND TYPICAL OPERATION

Operating Conditions (See note 3)

Heater voltage	6.3	V
Grid voltage	0	V
Load v.s.w.r.	1.2:1	max

Typical Performance

	Min	Typical	Max	
Heater current	2.0	2.3	2.5	A
Delay line voltage:				
at 7GHz	300	315	350	V
at 9GHz	580	615	700	V
at 11.5GHz	1300	1400	1500	V
Delay line current:				
at 7GHz	–	22	25	mA
at 9GHz	–	25	30	mA
at 11.5GHz	–	33	35	mA
Anode voltage (see note 7)	100	150	200	V
Anode current	–	2.0	10	mA
Solenoid current for N1010S (see note 7)	3.0	4.5	7.0	A
Solenoid voltage	16	23	24	V
Grid cut-off voltage (see note 8)	–	–70	–100	V
Output power:				
at 7GHz	20	40	–	mW
at 9GHz	20	80	–	mW
at 11.5GHz	20	130	–	mW
Frequency pulling (see note 9)	–	6.0	8.0	MHz
Signal to noise ratio (see note 10)	150	155	–	db/Hz

NOTES

1. Any magnetic materials must at all times be kept at least 8 inches (20cm) away from the N1010A, or a permanent loss of performance may result.
2. For the N1010A an airflow of $10ft^3$/min ($0.28m^3$/min) is required, directed at the radiator; for the N1010S $20ft^3$/min ($0.57m^3$/min), directed at the radiator and the sides of the solenoid. The pressure drop is less than 1 inch w.g.
3. All voltages except the heater voltage are with respect to cathode.
4. The grid must never become positive with respect to cathode. For normal c.w. operation the grid is connected to cathode.
5. The delay line and collector are internally connected.
6. Anode voltage must never be applied before the delay line voltage.
7. The optimum anode voltage and solenoid current (for N1010S) are marked on each tube.
8. The grid voltage at which oscillation ceases.
9. With a mismatch of v.s.w.r. 1.5:1, varied through all phases.
10. Measured as the ratio of the signal to the average noise in a 10MHz bandwidth, centred at least 20MHz from the carrier. For low noise performance the N1010A should be at least 18 inches (460mm) from any magnetic materials. Either the cathode, anode or delay line should be earthed.

TYPICAL DELAY LINE VOLTAGE CHARACTERISTIC

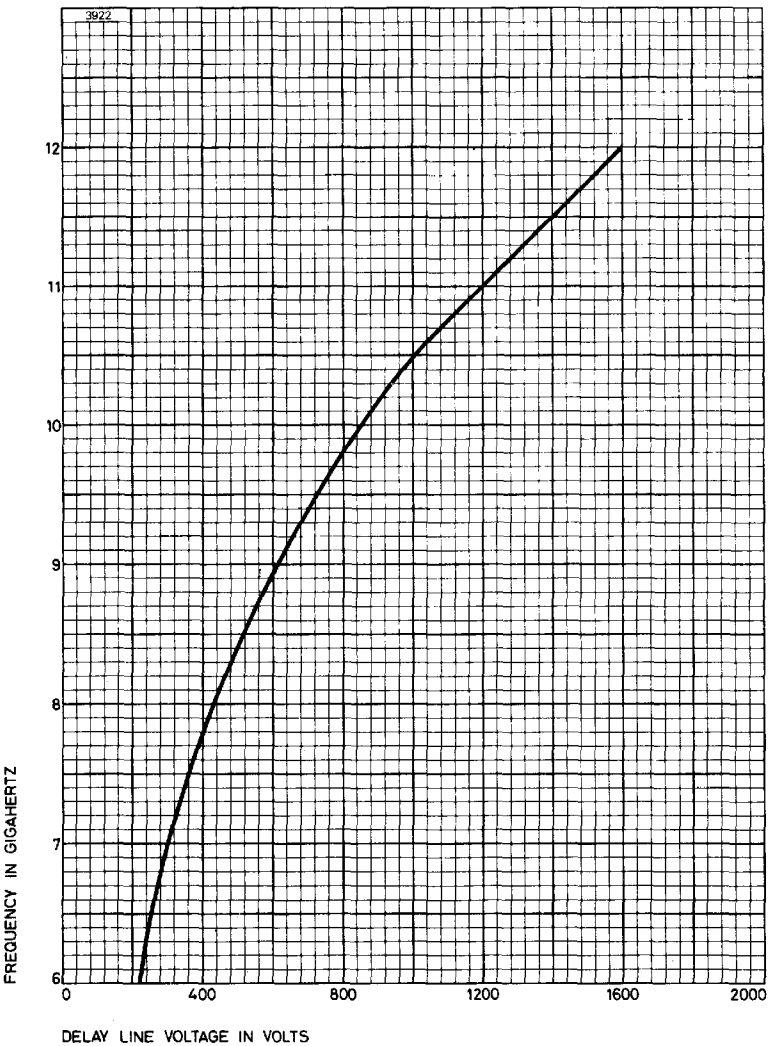

FREQUENCY CHANGE CHARACTERISTIC

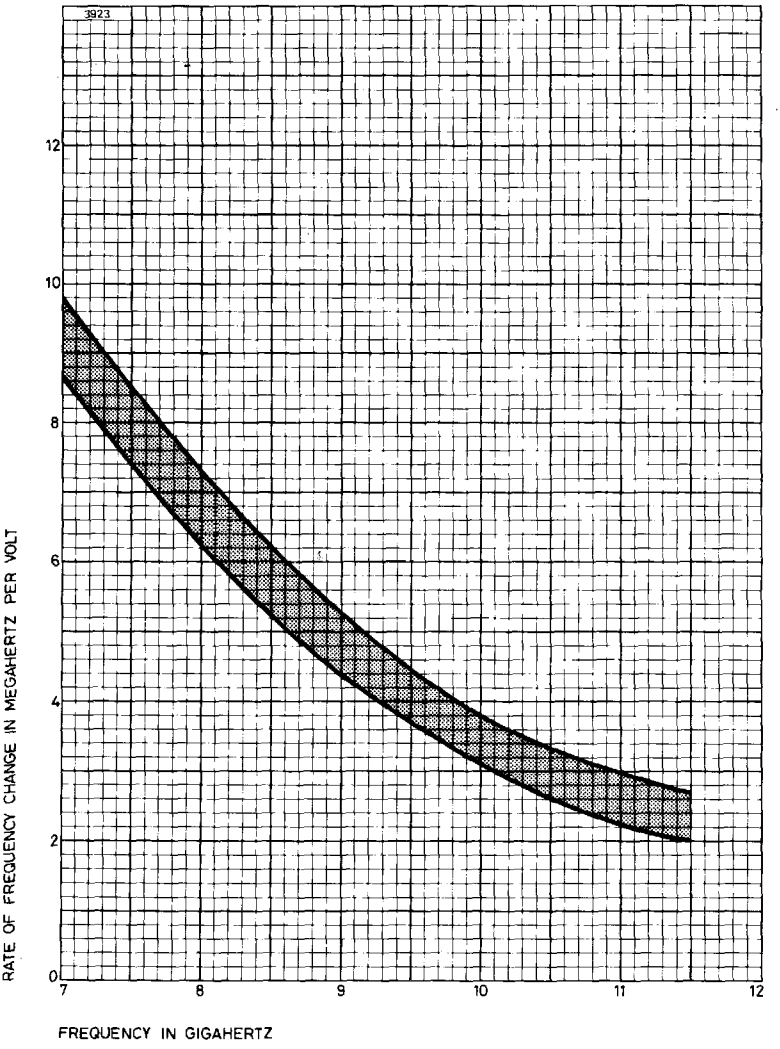

TYPICAL POWER CHARACTERISTIC

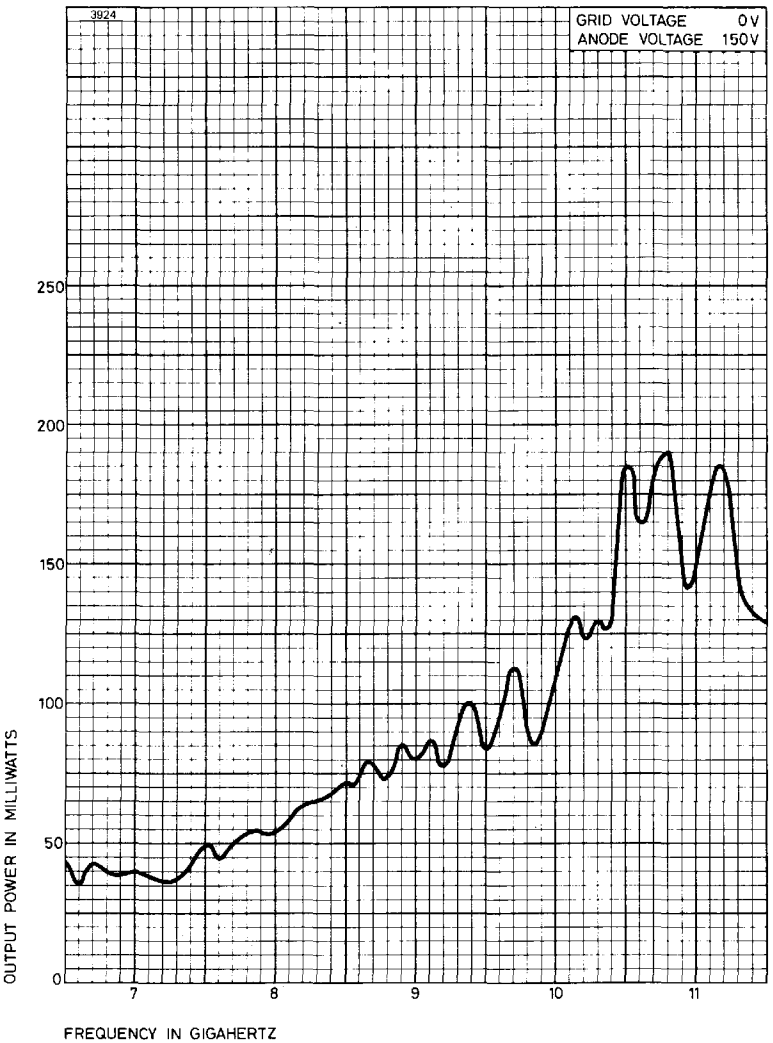

TYPICAL ANODE MODULATION CHARACTERISTICS

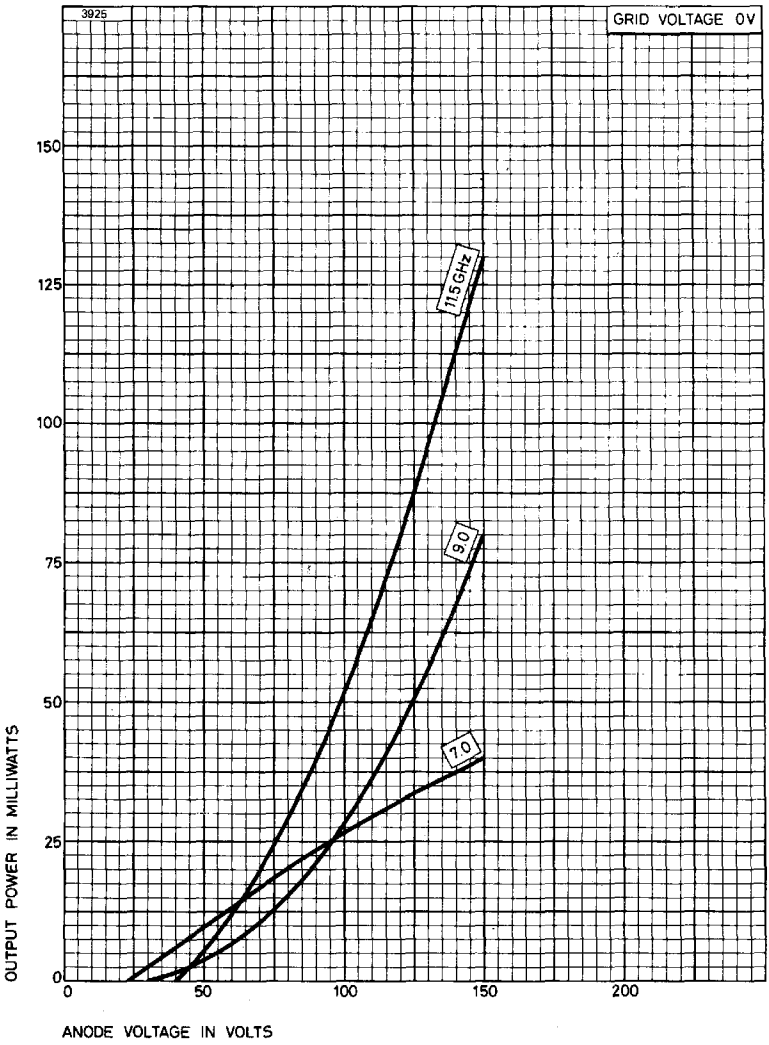

TYPICAL GRID MODULATION CHARACTERISTICS

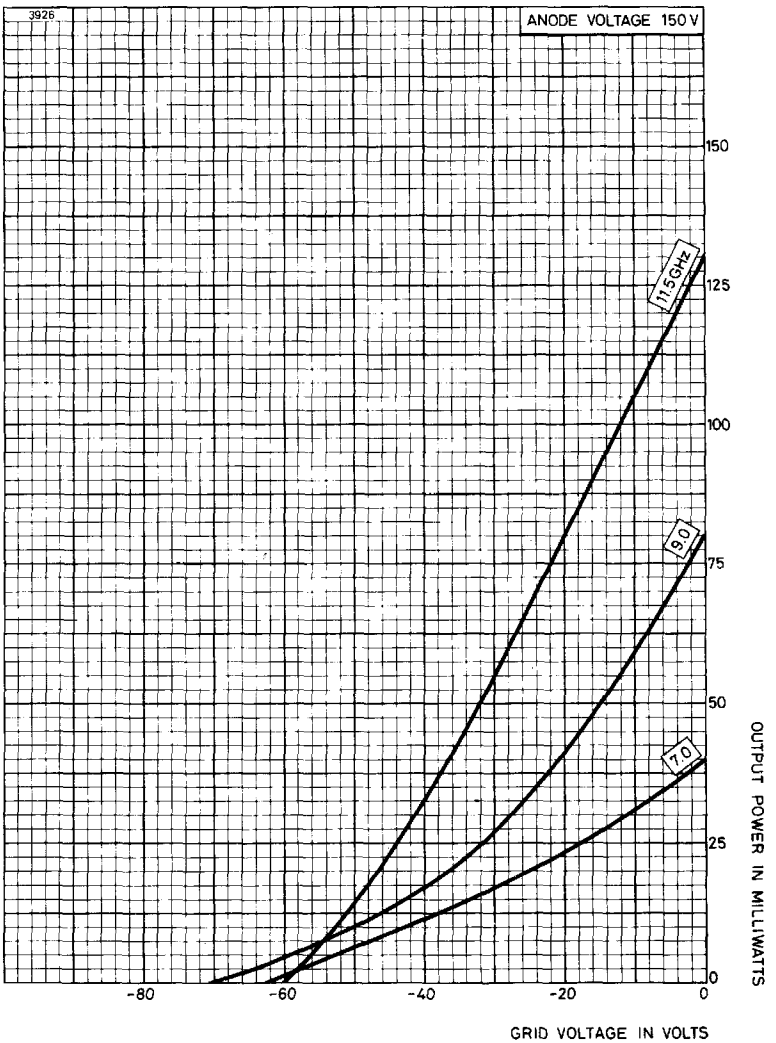

OUTLINE OF N1010A (All dimensions without limits are nominal)

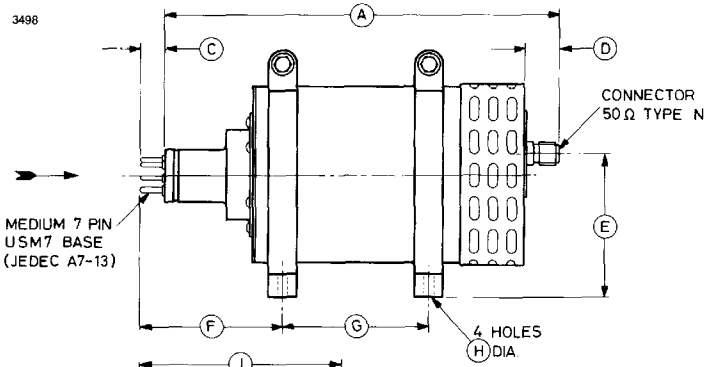

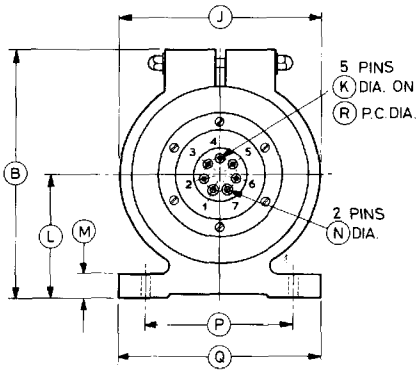

VIEW IN DIRECTION OF ARROW

Pin	Element
1	Heater
2	Cathode
3	Anode
4	Grid
5*	Delay line
6*	Collector
7	Heater

* Internally connected

Ref	Inches	Millimetres	Ref	Inches	Millimetres
A	9.625 ± 0.250	244.5 ± 6.4	J	4.961 ± 0.062	126.0 ± 1.6
B	6.000 max	152.4 max	K	0.125 ± 0.003	3.175 ± 0.076
C	0.625 max	15.88 max	L	2.953	75.01
D	0.813	20.65	M	0.400	10.16
E	3.504	89.00	N	0.156 ± 0.003	3.962 ± 0.076
F	3.460 ± 0.375	87.88 ± 9.53	P	3.543 ± 0.010	89.99 ± 0.25
G	3.543 ± 0.010	89.99 ± 0.25	Q	4.961 ± 0.062	126.0 ± 1.6
H	0.217	5.51	R	1.000	25.40

Millimetre dimensions have been derived from inches.

OUTLINE OF N1010S (All dimensions without limits are nominal)

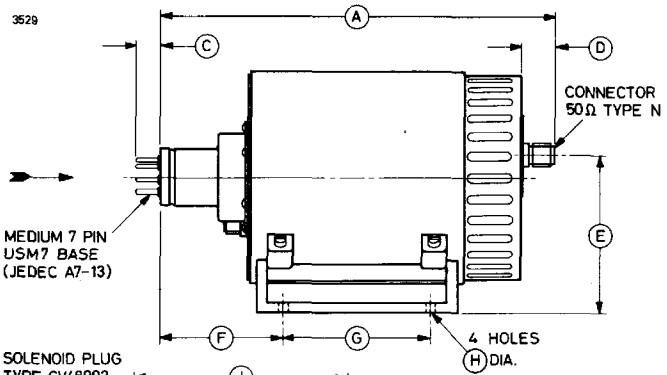

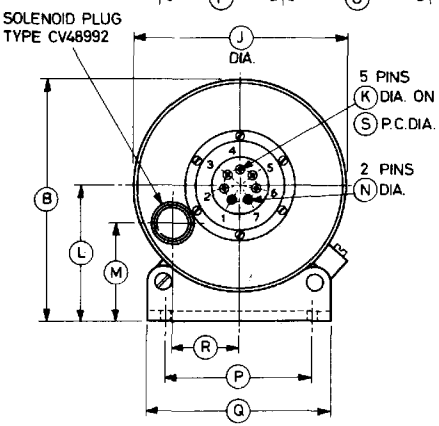

VIEW IN DIRECTION OF ARROW

Pin	Element
1	Heater
2	Cathode
3	Anode
4	Grid
5*	Delay line
6*	Collector
7	Heater

* Internally connected

Ref	Inches	Millimetres	Ref	Inches	Millimetres
A	9.625 ± 0.250	244.5 ± 6.4	K	0.125 ± 0.003	3.175 ± 0.076
B	5.860 ± 0.125	148.8 ± 3.2	L	3.270 ± 0.031	83.06 ± 0.79
C	0.625 max	15.88 max	M	2.343 ± 0.187	59.51 ± 4.75
D	0.813	20.65	N	0.156 ± 0.003	3.962 ± 0.076
E	3.801 ± 0.187	96.55 ± 4.75	P	3.543 ± 0.010	89.99 ± 0.25
F	3.000 ± 0.250	76.20 ± 6.35	Q	4.500 ± 0.031	114.3 ± 0.8
G	3.543 ± 0.010	89.99 ± 0.25	R	1.606 ± 0.187	40.79 ± 4.75
H	0.218	5.54	S	1.000	25.40
J	5.181 ± 0.015	131.6 ± 0.4			

Millimetre dimensions have been derived from inches.