TELEVISION TUBE

MW43-80Z

Direct viewing television tube with 17-in. diagonal rectangular metal-backed grey-glass screen. This tube has magnetic focusing and 90° magnetic deflection.

This data should be read in conjunction with GENERAL OPERATIONAL RECOMMENDATIONS—CATHODE RAY TUBES

HEATER

Suitable for series or parallel operation

V_h	6.3	V
I_h	300	mA

The limits of heater voltage and current are contained in 'General operational recommendations—cathode ray tubes'.

Note (applies to series operation only)—The surge heater voltage must not exceed $9.5V_{r.m.s.}$ when the supply is switched on. When used in a series heater chain a current limiting device may be necessary in the circuit to ensure that this voltage is not exceeded.

EXTERNAL CONDUCTIVE COATING

This tube has an external conductive coating, M, and the capacitance of this to the final anode may be used to provide smoothing for the e.h.t. supply. The tube marking and warning labels are on the side of the cone opposite the final anode connector and this side should not be used for making contact to the external conductive coating.

CAPACITANCES

C_{g-all}	<8.0	pF
C_{k-all}	<5.0	pF
$C_{k+a2-all}$	<11	pF
C_{a3-M}	1200	pF

SCREEN

Metal backed		
Fluorescent colour	white	
Light transmission	70	%
Useful screen area	see drawing on page D4	

FOCUSING

Magnetic

DEFLECTION

Double magnetic

For timebase designs the following spreads in the useful screen area should be considered.

Picture height		
Maximum	284	mm
Minimum	273	mm
Picture width		
Maximum	369	mm
Minimum	362	mm
Picture diagonal		
Maximum	400	mm
Minimum	390	mm

The spread in the cone length can be obtained from the outline drawing.

MW43-80Z

TELEVISION TUBE

ION TRAP

This tube does not use an external ion trap magnet. When used as a replacement for ion trap types, the ion trap magnet and any lead connected to it should be discarded.

REFERENCE LINE GAUGE

See 'General operational recommendations—cathode ray tubes'.

MOUNTING POSITION

Any

The tube socket should not be rigidly mounted but should have flexible leads and be allowed to move freely. The bottom circumference of the base shell will fall within a circle having a diameter of 55mm which is centred upon the perpendicular from the centre of the face.

PREFOCUSING

The spot size and uniformity of focus depend upon V_{a2}. At V_{a2} zero or negative with respect to cathode the spot size at the centre of the screen and the width of the electron beam are such that optimum uniformity of focus is obtained over the whole screen. If V_{a2} is increased, the spot size at the centre of the screen is reduced but the width of the electron beam is increased, resulting in inferior focus at the edges of the screen.

With increased V_{a2}, the power of the external focusing magnet has to be increased.

OPERATING CONDITIONS

V_{a3}	14	kV
V_{a2}	0	V
V_{a1}	300	V
V_g for visual extinction of focused raster	−40 to −86	V

LIMITING VALUES (design centre ratings)

**V_{a3} max.	16	kV
V_{a3} min.	10	kV
V_{a2} max.	410	V
V_{a2} min.	–100	V
V_{a1} max.	410	V
V_{a1} min.	200	V
*$-V_g$ max.	150	V
†V_{h-k}		
Cathode positive		
d.c. max.	200	V
pk max.	300	V
Cathode negative		
d.c. max.	125	V
pk max.	250	V
R_{h-k} max.	1.0	MΩ
Z_{k-c} max. (f = 50Hz)	100	kΩ
R_{g-k} max.	1.5	MΩ
Z_{g-k} max. (f = 50Hz)	500	kΩ
Max. a_1 supply source impedance	1.5	MΩ
Max. a_2 supply source impedance	1.5	MΩ

*The d.c. value of grid bias must not be allowed to become positive with respect to the cathode, except during the period immediately after switching the receiver on or off when it may be allowed to rise to +1V. The maximum positive grid excursion of the video signal may reach 2V and at this voltage the grid current may be expected to be approximately 2mA.

**The product of V_{a3} and I_t (average value for the whole screen) must not exceed 6W.

†In order to avoid excessive hum the a.c. component of V_{h-k} should be as low as possible ($<20V_{r.m.s.}$).
During a warming-up period not exceeding 45s $v_{h-k(pk)}$ max. (cathode positive) is allowed to rise to 410V.

WEIGHT

Tube alone	6.4	kg
	14	lb

MW43-80Z

TELEVISION TUBE

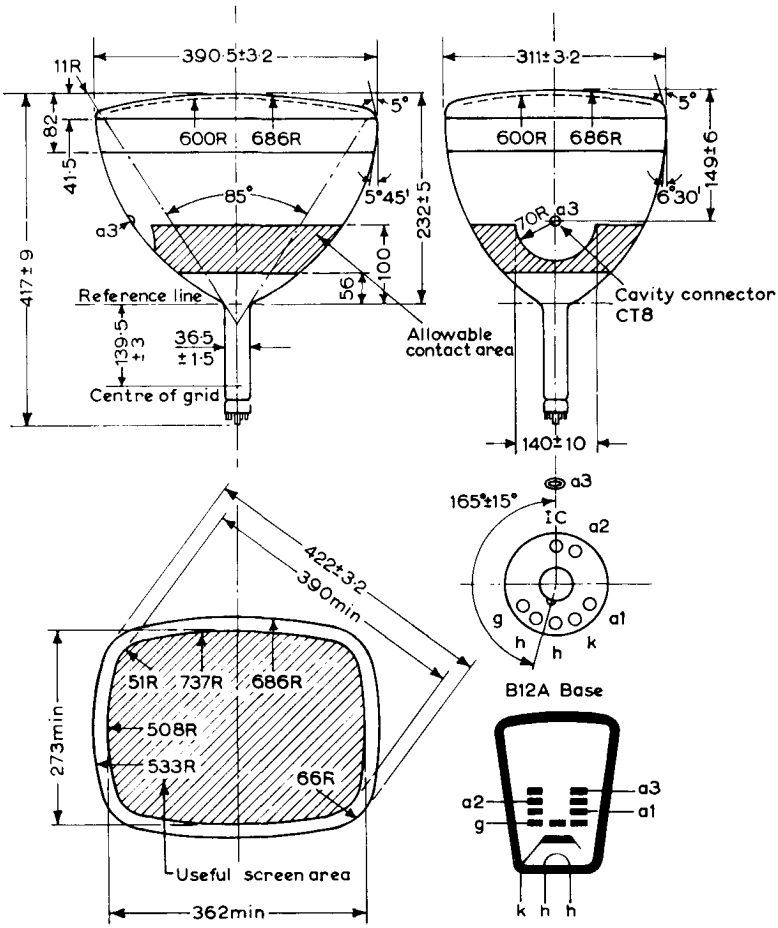

All dimensions in mm