PHILIPS

MG6-2
MU6-2
MY6-2

COLOUR TELEVISION PROJECTION TUBES

SCREEN

For screen properties please refer to front of this section

Useful screen diameter = min. 55 mm

HEATING

Indirect by A.C. or D.C.

Heater voltage V_f = 6.3 V

Heater current I_f = 0.3 A

Dimensions in mm

Base: V

Net weight 145 g

Shipping weight (10 pieces) 7850 g

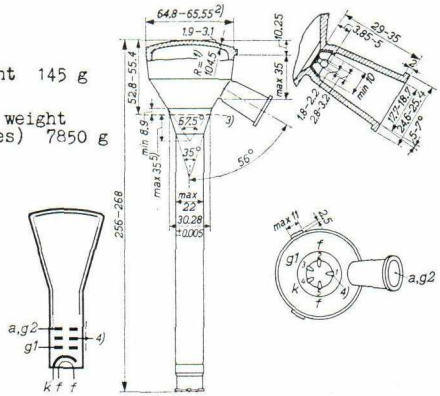

The tolerance of the position of the base with respect to the tube is ± 10°

---

1) Inner radius of curvature of the face plate
The deviation of the centre of the outer radius of curvature with respect to the centre line of the neck is max. 2 mm

2) Eccentricity of the face plate with respect to the centre line of the neck is max. 0.9 mm

3) Reference line, determined by the diameter of 30.28 ± 0.005 mm

4) Spark trap and outer coating. This connection must be earthed

5) The distance from the deflection centre to the reference line should not exceed 35 mm

PHILIPS

MOUNTING POSITION

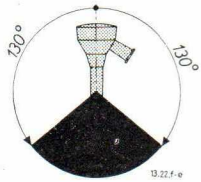

CAPACITANCES

Grid No.1 to all other electrodes	C_{g_1}	=	6.3 pF
Cathode to all other electrodes	C_k	=	6.3 pF
Anode and grid No.2 to outer conductive coating	C_{a,g_2-m}	=	450 pF

FOCUSING Magnetic

Focusing coil with iron casing

Number of ampere-turns at an anode and grid No.2 voltage of 25 kV	920 [1]
Air gap	11 to 13 mm
Distance from the centre of the air gap to the reference line	83 to 87 mm
Inner diameter of the inner bush	27.5 mm

For centring it is necessary that the focusing coil can be tilted over 3° to either side

DEFLECTION Magnetic

OPERATING CHARACTERISTICS

Anode and grid No.2 voltage	$-V_{a,g_2}$	=	25 kV
Negative grid No.1 voltage for cut-off	$-V_{g_1}(I_\ell=0)$	=	40 to 90 V

[1]) Without saturation of the iron casing
In order to reduce the influence of voltage fluctuations it is, however, advisable to saturate the iron to such an extent that the required number of ampere-turns becomes about 10 % higher

REMARKS

Measures should be taken for the beam current to be switched off immediately when one of the time-base circuits becomes defective

An X-ray radiation shielding with an equivalent lead thickness of 0.5 mm is required to protect the observer. When the tube is used in an optical box, the screening by the box will in general be sufficient

LIMITING VALUES (Design centre limits)

Anode and grid No.2 voltage	$V_{a,g2}$	= max. 25 kV [1]
Negative grid No.1 voltage	$-V_{g1}$	= max. 200 V [2]
External grid No.1 resistance	R_{g1}	= max. 1.5 MΩ
External resistance between heater and cathode	R_{kf}	= max. 20 kΩ
Voltage between heater and cathode	V_{kf}	= max. 125 V [2]

[1]) At nominal mains voltage and with a raster area of at least 14 cm^2 and a spot velocity of at least 450 m/s the load curve of the E.H.T. unit should not at any point go beyond the curve I on page B. It is desirable that under these conditions the design load curve is in accordance with curve II

The total charge of the filter capacitors in the supply unit should not exceed 130 μC

The curves on page B refer to application in normal colour television receivers. In case of other applications the average current should be limited to 200 μA

[2]) During the operation of the security circuit.

$-V_{g1}$ = max. 300 V

V_{kf} = max. 250 V

PHILIPS

MG6-2
MU6-2
MY6-2

7Z00943 / 13.7.f-b

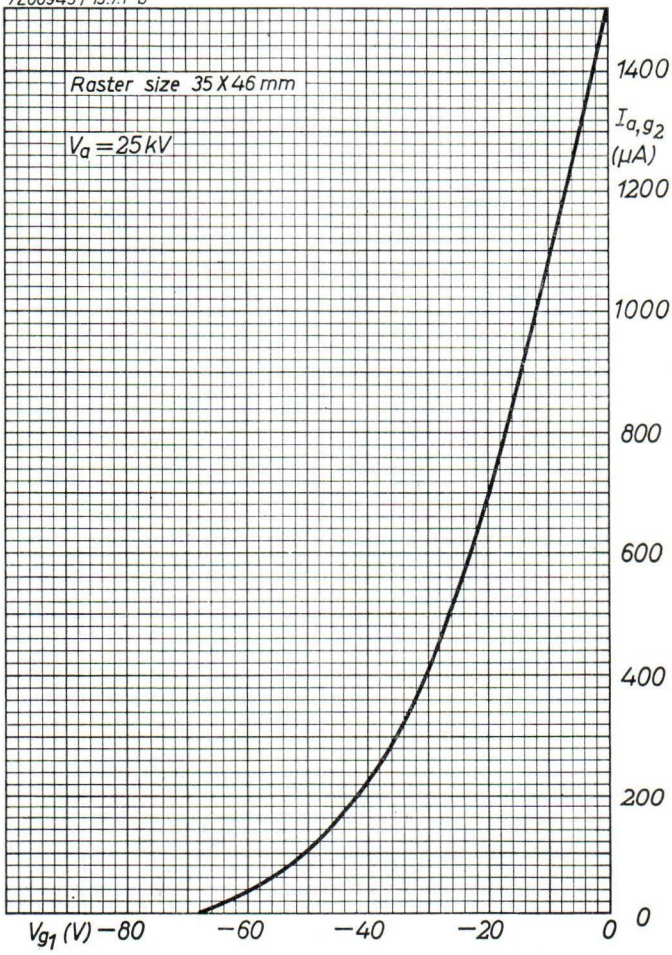

3.3.1963

A

MG6-2
MU6-2
MY6-2

PHILIPS

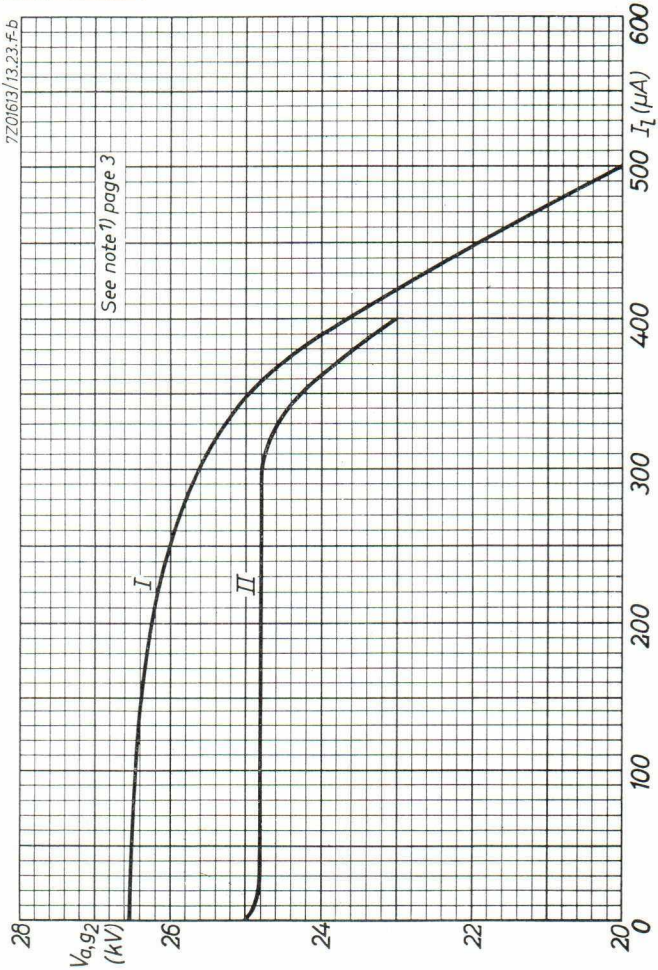

B