TUNABLE L-BAND MAGNETRONS
MCV 1352 - MCV 1353

The MCV 1352 and MCV 1353 magnetrons are pulsed, high-power oscillators, each capable of delivering a minimum peak power output of 2.2 megawatts. Specifically designed to take the place of up to 15 ordinary fixed-frequency magnetrons, these two mechanically tuned tubes together cover the entire 1270 - 1370 MHz band. They are also mechanically and electrically interchangeable with the fixed-frequency models.

The MCV 1352 and MCV 1353 magnetrons find application in air-traffic-control (ATC) and other air-search radars, particularly for MTI systems requiring the generation of RF pulses largely free of time, amplitude or frequency jitter. Because they are tunable, these magnetrons have a major advantage in ATC - radar applications, i.e., their operating frequency can be easily shifted a few megahertz, up or down, to eliminate accidental jamming by other nearby radars. This feature is, of course, even more important in military use, where the jamming may be intentional.

A further advantage of these tunable L-band magnetrons is the way they simplify the spares support problem. For instance, in two-transmitter frequency-diversity operations, only one tunable magnetron need be kept on hand in spares storage to replace either of the operating tubes (as long as both frequencies used fall in either the 1270 - 1320 MHz band or in the 1315 to 1370 MHz band).

Having a circular-waveguide output, both the MCV 1352 and MCV 1353 are designed to be used with a circular-to-rectangular-waveguide transition (not furnished with the tube).

These magnetrons are each cooled by a simple circulating-water system, operating with ordinary tap water and requiring no complicated vapor-condensation system.

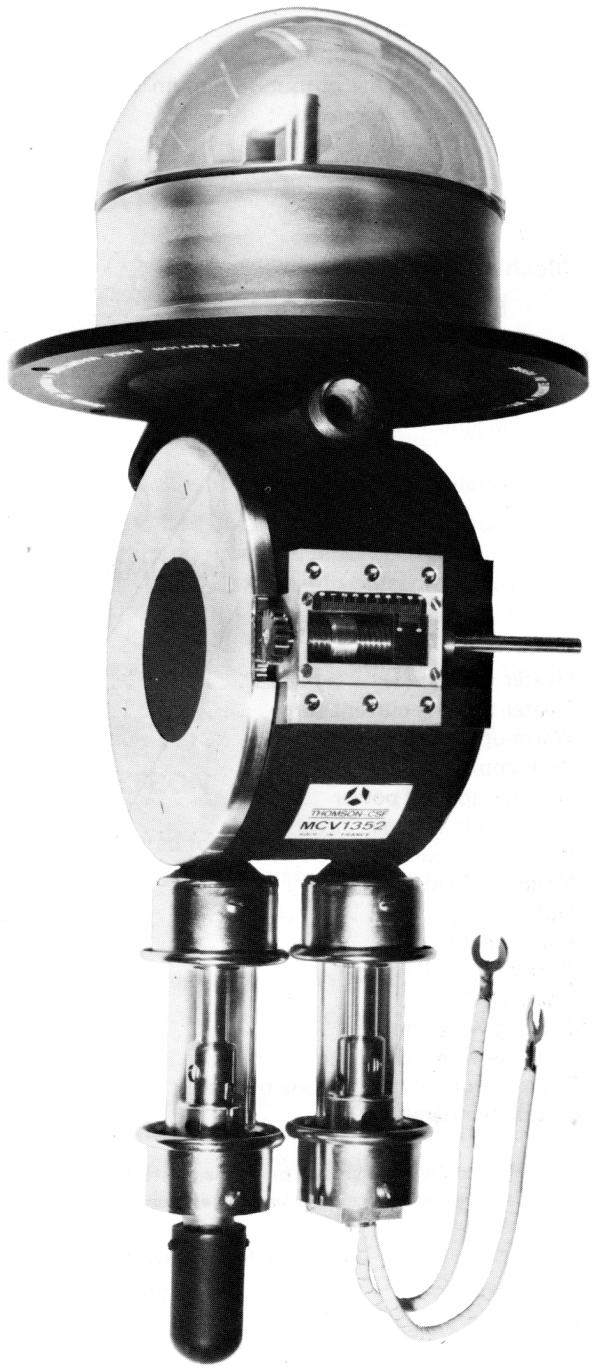

THOMSON-CSF
GROUPEMENT TUBES ELECTRONIQUES

GENERAL CHARACTERISTICS

Electrical

Cathode	Indirectly heated
Heater voltage	20 V
Heater current	13 to 15 A
Peak anode voltage	38 to 42 kV
Peak anode current	155 A
Peak power output, typical	2. 3 MW
Average power output, minimum	2. 2 kW
Operating frequency :	
MCV 1352	1270 to 1320 MHz
MCV 1353	1315 to 1370 MHz

Mechanical

Mounting position	Vertical, cathode and heater terminals up
Dimensions	See the outline drawing
Weight (approximate)	13 kg
Tuner operating torque	2 cm/kg, nominal
Magnet	Separate permanent magnet (not supplied with the tube)
Cooling	By water circulation

MAXIMUM AND MINIMUM RATINGS
(non-simultaneous)

	Min.	Max.	Units
Heater voltage (1)	18	22	V
Heater starting-current surge	–	50	A
Warm-up time (1)	5	–	mn
Peak applied power	–	6. 4	MW
Average applied power	–	6. 4	kW
Peak anode voltage	35	42	kV
Peak anode current	–	160	A
Magnetic field	900	1000	G
Duty cycle	–	0. 15	%
Pulse length	–	5	µs
Rate of rise of voltage	–	60	kV/µs
Load VSWR	–	1. 5	
Cooling-water flow	1. 5	–	l/mn
Cooling-water outlet temperature	–	80	°C
Temperature at the cathode output	–	165	°C
Anode temperature	–	80	°C

(1) No anode voltage may be applied until the cathode has been warmed up. After application of high voltage to the anode, the heater voltage must be progressively reduced, as follows :

Average input power (watts)	Heater voltage
Less than 2000	20
2000 to 3000	15
3000 to 4000	10
4000 to 5000	5
More than 5000	0

TYPICAL OPERATION

Heater voltage	0	V
Magnetic field	950	G
Average anode current	155	mA
Peak anode voltage	39	kV
Pulse length	4	µs
Duty cycle	0. 1	%
Rate of rise of voltage	60	kV/µs
Average power output	2. 4	kW
Peak power output	2. 4	MW

STORAGE AND INSTALLATION

Stored magnetrons are much more likely to remain in a ready-to-operate condition if left in their original packing or placed in correctly designed storage racks. Whenever transported, they should be correctly packed to guard against subjecting the tube to undue vibration, shock or stress.

Care must be taken whenever handling these magnetrons ; they can be permanently damaged if subjected to rough handling. This is especially true when fitting the magnetron into its permanent magnet. Additionally, steel, nickel or any other magnetic materials must be kept from close contact with the magnet ; only non-magnetic tools should be employed during installation operations.

Electrical connections to the heater and cathode terminals should be tight, but not overly so. During tube operation, the heater and cathode terminals operate at high temperature, so provision must be made for thermal expansion. The anode voltage-supply return must be connected to the cathode terminal to prevent anode current and transients from passing through the heater and possibly causing burn out.

Never overstress the output section. Any mechanical pressure applied should be uniform, and a flexible-waveguide section should be inserted near the magnetron output.

STARTING A NEW MAGNETRON

When a new magnetron, or a magnetron that has been idle or stored for a while, is started up, some arcing and instability may occur. If instability is present, as evidenced by arcing or erratic anode current, the following procedure is recommended :

1 - After five minutes or warm-up, with 20 volts applied to the heater filament, raise the anode voltage gradually from zero (preferably at the shortest pulse duration) until one - half of the normal operating power is reached. The heater voltage must be progressively reduced as indicated in note (1) to the Maximum and Minimum Ratings table, page 2.

2 - As soon as the average anode current indicates stable operation, gradually increase the anode current until the normal operating conditions are reached. If arcing occurs, stop increasing anode current until the magnetron operation re-stabilizes. Be careful not to exceed any maximum ratings.

OPERATING ADVICE

To protect the tube in case of arcing or flashover, a capacitor of at least 0.004 µF must be connected in parallel with the filament, directly across the output connections.

WARNING

High power magnetrons emit a significant level of X-rays in the areas of the cathode and the RF output. Appropriate shielding should be installed to ensure protection of the operating personnel.

THOMSON-CSF
GROUPEMENT TUBES ELECTRONIQUES

OUTLINE DRAWING

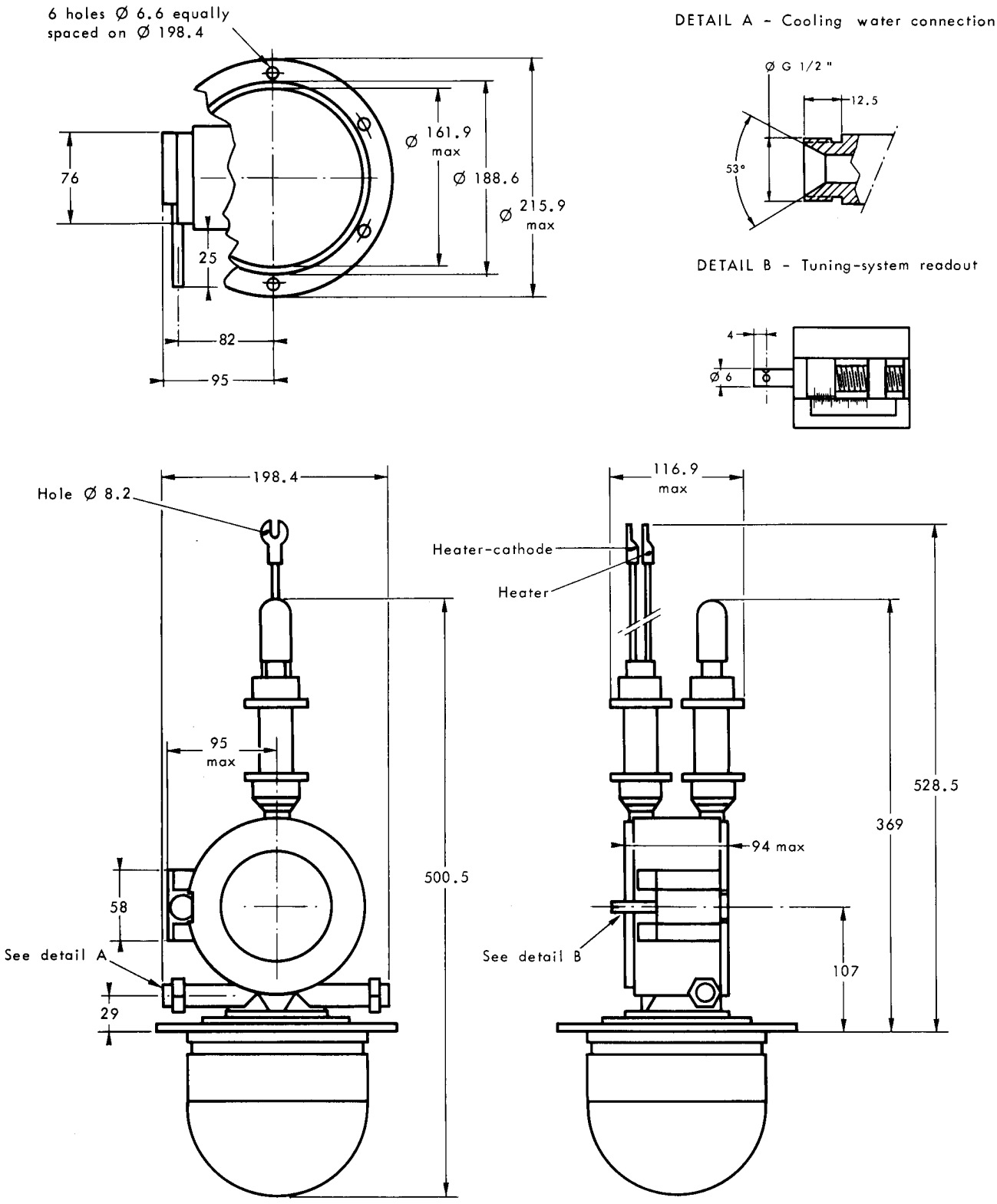

Dimensions nominal, in mm.