MCV 1055 E,F,G MAGNETRONS

- MAGNETRONS FOR PULSED OPERATION
- 1 MW MINIMAL PEAK POWER OUTPUT
- FREQUENCY TUNABLE IN S-BAND

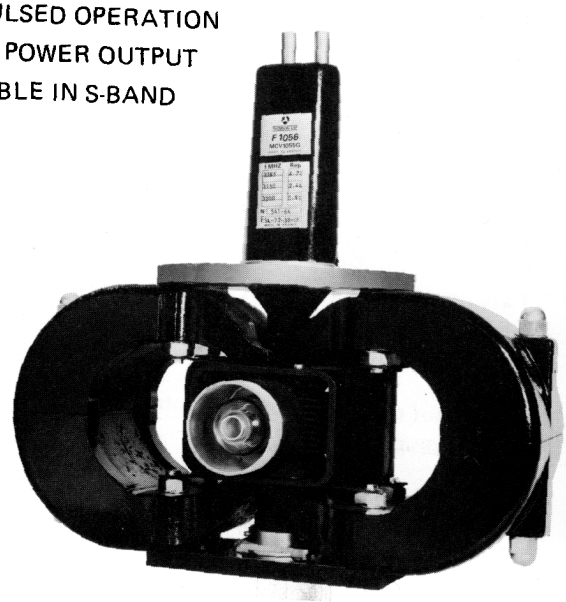

The MCV 1055 series of magnetrons deliver a peak output of at least 1 megawatt in S-Band, with a peak current of 60 amperes.

The RF output, under pressurization, is a 50 ohms standard coaxial line, which can be coupled to a rectangular waveguide through a suitable transition.

The cathode is of oxide type, indirectly heated.

GENERAL CHARACTERISTICS

Electrical

Ia avg. = 60 mA	Du = 0.001	t_{p1} = 4 ± 0.4 µs
E_f = 0 V	VSWR ⩽ 1.1 : 1	t_{p2} = 2 ± 2.2 µs
Warm-up :	E_f = 14 V	t = 240 s

	min.	max.	
Heater current (E_f = 14 V)	4.8	5.6	A
Peak anode voltage	27	33	kV
Average power output	1.0	–	kW
Frequency MCV 1055 E	2900	3015	MHz
Frequency MCV 1055 F	2985	3115	MHz
Frequency MCV 1055 G	3085	3200	MHz
Radio frequency bandwidth (1)	–	2.5/t	MHz
Side lobe ratio (2)	6	–	dB
Stability (3)	–	1	%
Pushing (4)	–	0.1	MHz/A
Temperature coefficient (5)	–	0.15	MHz/°C
Pulling (6)	–	20	MHz
Anode-cathode capacitance	–	25	pF

(1) Measure at 1/4 of the maximum power on the principal lobe.
(2) Ratio between the maximum power of the principal lobe and the maximum power of the greatest secondary lobe.
(3) Missing pulses counted during the last five minutes of a fifteen minutes test.
A "missing pulse" is defined when its rf energy level is lower than 70 % of the rf energy level of pulses produced in the frequency range by normal oscillation of the tube.
(4) Measured between 50 and 65 A peak.
(5) Measured for a temperature variation of 30 °C ± 5 °C on the anode, according to note 12.
(6) Frequency deviation measured with a VSWR = 1.5 : 1 and the phase being cycled through 180°.

THOMSON-CSF
GROUPEMENT TUBES ELECTRONIQUES

ABSOLUTE RATINGS

(non simultaneous)

	min.	max.	
Warm-up time	240	–	s
Warm-up voltage	13	15	V
Heater voltage in operation	note 7		
Heater surge current (8)	–	15	A
Average anode current	–	70	mA
Duty cycle	–	0. 0011	
Peak anode current	–	65	A
Pulse duration (9)	0. 8	4. 4	µs
Rate of rise of current (10)	0. 15	0. 5	µs
Decay time (10)	–	0. 7	µs
Rate of rise of voltage (11)	70	100	kV/µs
VSWR	–	1. 5 : 1	
RF output pressurization (absolute)	2. 5	4	bar
Anode temperature (12)	–	120	°C

(7) After application of the anode voltage, the heater voltage should be set to a value given by the following formula :

$$E_f\,(Volt) = (14 - 0.0115 \times P_a) \pm 5\,\% \qquad P_a\,(watt) \leqslant 1200\ W$$
$$E_f = 0 \text{ for } P_a \geqslant 1200\ W \text{ or } P_a = 30 \times I_a\ avg\ (mA)$$

(8) Maximum current when applying heater voltage.
(9) Measured at the average half value point of current pulse.
(10) Measured between 10 and 90 % of the average peak value on the current pulse sides. Furthermore, the addition of the rise time and decay time should never exceeds 50 % of the pulse duration measured as indicated in note 9.
(11) Maximum slope of the voltage pulse front, measured above 80 % of the average peak value of the pulse.
(12) The measurement point is indicated on the outline drawing (junction between the central cooling fin and the rf output on the anode body).

TYPICAL OPERATION

Pulse duration	1	4	µs
Duty cycle	.001	.001	
Peak anode current	60	60	A
Peak anode voltage	30	30	kV
Heater voltage	0	0	V
Peak RF power output	1. 1	1. 1	MW
Frequency pulling	14	14	MHz
Frequency pushing	.05	.05	MHz/A

HEATER VOLTAGE CHARACTERISTICS

These plots indicate the heater current versus heater voltage.

The warm-up plot corresponds to a tube in stand-by conditions (high voltage not applied).

The heater characteristics in normal operation correspond to a tube oscillating, the heater voltage being calculated by the formula given in note 7.

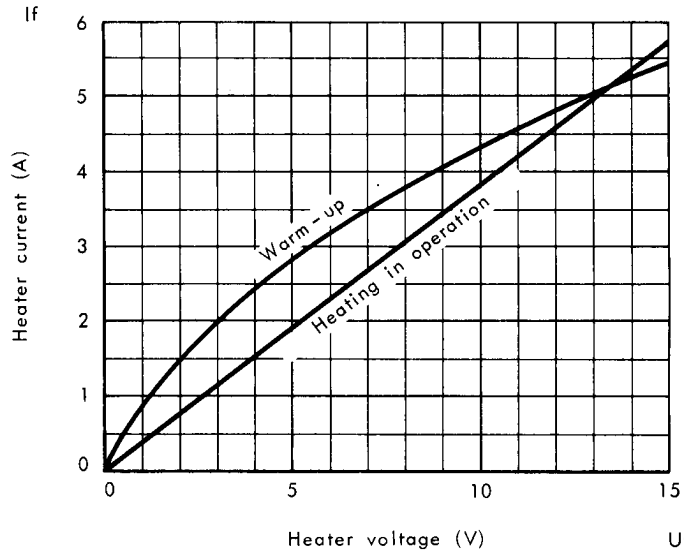

COOLING CHARACTERISTICS

The plots give the temperature rise of the anode from the ambient temperature, versus anode current, for the different values of cooling air flow.

Temperature 20 °C.

Normal atmospheric pressure.

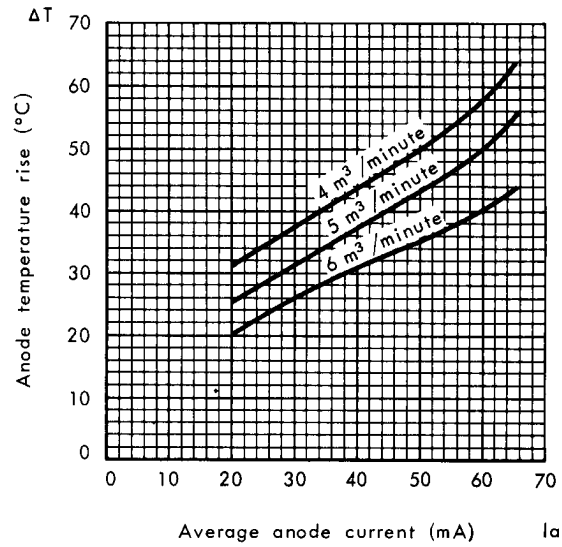

The curve gives pressure drop in the air duct versus air flow.

Ambient temperature 20 °C.

Normal atmospheric pressure.

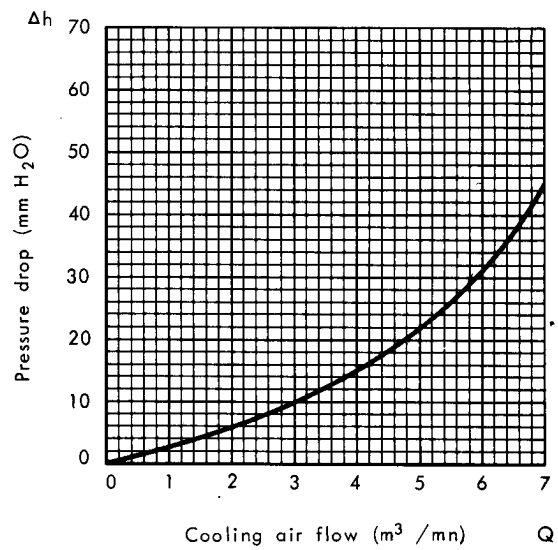

THOMSON-CSF
GROUPEMENT TUBES ELECTRONIQUES

RIEKE DIAGRAM

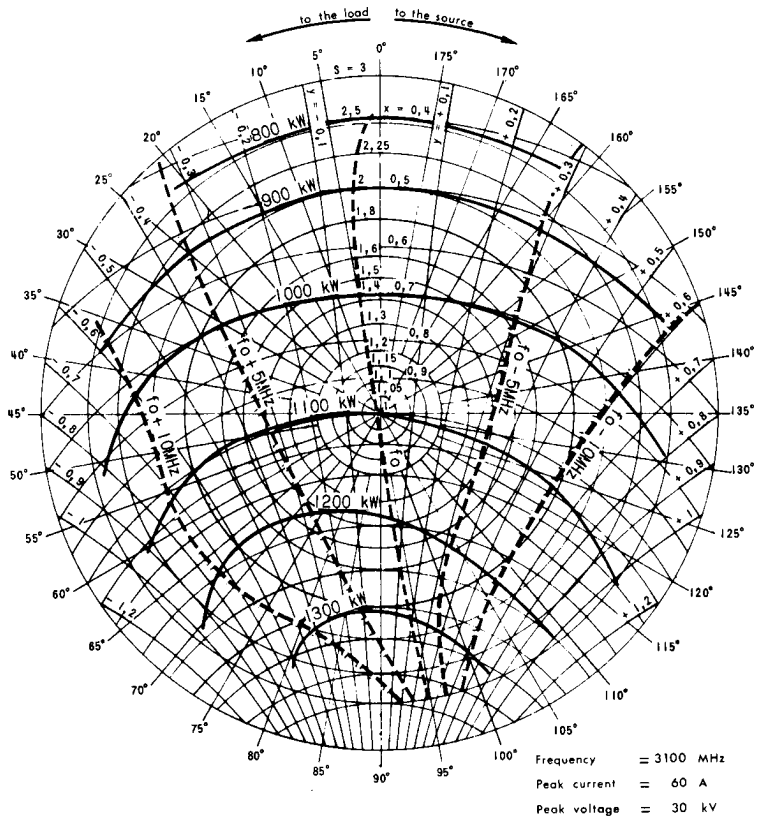

OPERATING INSTRUCTIONS

Heater

The heater should be protected against arcing (particularly when starting a new tube), a capacitor of about 10 000 pF should be placed at the heater connections, as close as possible to the tube.

Pulses

The ratings concerning the current and voltage pulses should be strictly observed :

- too long rise time or decay time makes the RF bandwidth worse.
- too short rise time produces instability.
- the ripple over the rop of the pulse should be as low as possible and never exceeds 8 % of the average value of the peak current pulse. The best performances are obtained with a current between 45 and 60 A.

For current values under 45 A, the RF bandwidth presents generally lower quality. For values higher than 65 A the tube stability decreases, as the pulse is wide.

RF output

To avoid arcing at the tube output, and consequently its destruction, it is necessary to provide dry air pressurization.

When the VSWR $\leqslant$ 1. 2 : 1 the minimum pressure is 2. 0 kg/cm^2
When the VSWR reaches 1. 5 : 1 the minimum pressure is 2. 8 kg/cm^2

Forced air cooling

Dimensions of the air channel should be convenient for the air inlet integral to the tube ; if not, turbulent flow does not insure satisfactory cooling.

The anode temperature (note 11) should never exceed 120 °C.

INSTALLATION AND STARTING OF A NEW TUBE

The tube should operate in vertical position, the heater connections being upside or down side.

Strains should not be applied to the RF output, the connection should be elastic enough to protect the glass part when heat expansion occurs.

The temperature rise at the central part of the output connector is approximately 250 °C for the following operating conditions :

$$I_a = 60 \text{ mA}$$
$$D_u = 0.001$$

Magnetic materials should be kept at least 30 cm away from the tube.

Mechanical stress should not be applied to the tuning mechanism either when setting the tube or when turning the tuning axis, particularly when reaching the stops.

Shocks and vibrations should be avoided.

Before applying voltages, the tube should be tuned at the oscillation frequency required. If the frequency is to be changed during operation, the average current value should be brought down from 60 A to a value between 40 - 50 A, by decreasing the high voltage.

When a tube is new or has not been used for a long time, instability or arcing may occur, as evidenced by erratic average anode current. If the arcs are frequent, the magnetron should be progressively started in operation, the high voltage being rised slowly in order to limit arcing. After 20 minutes of operating at reduced voltage the tube is normally ready to operate without instability.

Heater voltage adjustment is very important during this procedure- see note 7.

THOMSON-CSF
GROUPEMENT TUBES ELECTRONIQUES

OUTLINE DRAWING

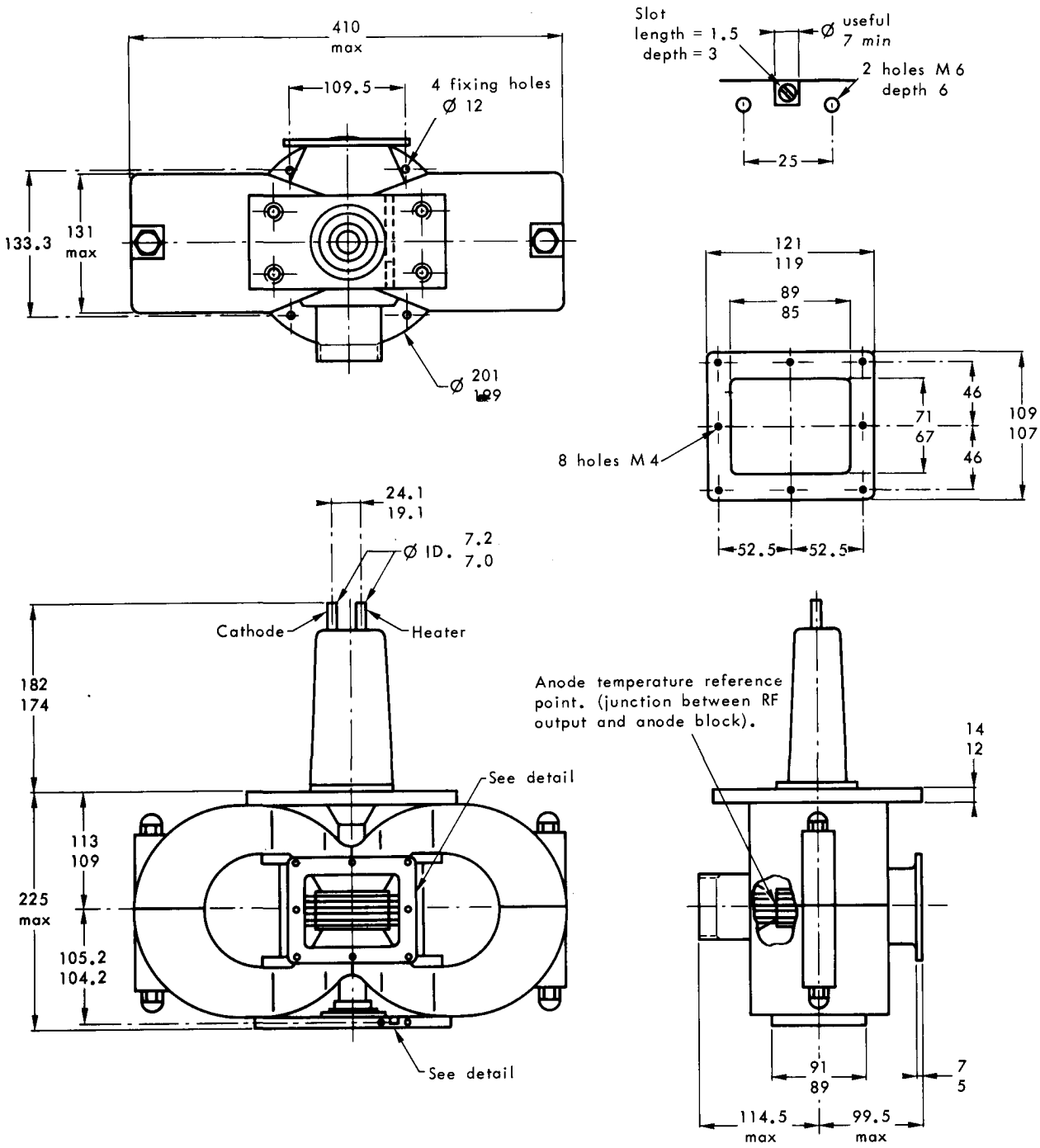

Dimensions in mm.