M5035

TUNABLE S-BAND MAGNETRON

Service Type CV11154

The data should be read in conjunction with the Magnetron Preamble.

ABRIDGED DATA

Mechanically tuned pulse magnetron, similar to 5657.

Tuning range	2900 to 3100	MHz
Typical peak output power	1.0	MW
Magnet	see note 1 on page 5	
Output	coaxial line	
Coupler	see page 9	
Cooling	forced-air	

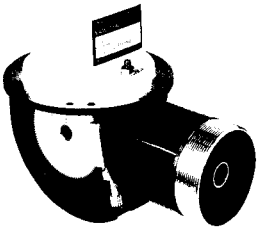

© 1977 English Electric Valve Company Limited

November 1977

Supersedes March 1974 Issue

GENERAL

Electrical

Cathode	indirectly heated	
Heater voltage (see note 2)	16	V
Heater current at 16V	3.1	A
Heater starting current, peak value, not to be exceeded	15	A max
Cathode pre-heating time (minimum) (see note 3)	2	min

Mechanical

Overall dimensions	10.523 x 7.233 x 4.624 inches max 267.3 x 183.7 x 117.5mm max	
Net weight	5½ pounds (2.5kg) approx	
Mounting position	any	
Tuning (see note 4)	mechanical	
Tuner revolutions to cover frequency range	120	max

Cooling (see note 5) . . . . . forced-air

MAXIMUM AND MINIMUM RATINGS (Absolute values)

These ratings cannot necessarily be used simultaneously, and no individual rating should be exceeded.

	Min	Max	
Heater voltage (see note 2)	14.4	17.6	V
Heater starting current (peak)	–	15	A
Anode voltage (peak)	–	32.5	kV
Anode current (peak)	–	70	A
Input power (peak)	–	2.2	MW
Input power (mean) (see note 6)	–	1.3	kW
Duty cycle	–	0.001	
Pulse duration	–	2.5	μs
Rate of rise of voltage pulse (see note 7)	100	200	kV/μs

Continued on page 3

MAXIMUM AND MINIMUM RATINGS (Continued)

	Min	Max	
Anode temperature (see note 5)	–	100	°C
Cathode terminal temperature	–	100	°C
V.S.W.R. at the output coupler	–	1.5:1	
Ambient pressure for satisfactory operation	500	–	mm Hg
Pressurizing of input and output circuit (see note 8)	–	45	lb/in²
	–	3.2	kg/cm²

TYPICAL OPERATION

Operational Conditions

Heater voltage	8.0	8.0	8.0	V
Magnetic field (see note 1)	270	270	270	mT
	2700	2700	2700	gauss
Anode current (peak)	50	70	60	A
Pulse duration	0.5	1.0	2.0	μs
Pulse repetition rate	1500	500	300	p.p.s.

Typical Performance

Anode voltage (peak)	30	30	30	kV
Output power (peak)	700	1000	800	kW
Output power (mean)	525	500	480	W

TEST CONDITIONS AND LIMITS

The magnetron is tested to comply with the following specification

Test Conditions

	Oscillation 1	Oscillation 2	Oscillation 3	
Magnetic field (see note 1)	270 ± 5 2700 ± 50	270 ± 5 2700 ± 50	270 ± 5 2700 ± 50	mT gauss
Heater voltage (for test)	10	10	8.0	V
Anode current (mean)	35	35	38.5	mA
Duty cycle	0.0005	0.0006	0.0006	
Pulse duration (see note 9)	1.0	2.0	1.5	μs
V.S.W.R. at the output coupler	1.15:1	1.15:1	1.15:1	
Rate of rise of voltage pulse (see note 8)	200	200	200	kV/μs

Limits

	Min	Max	Min	Max	Min	Max	
Anode voltage (peak) (see note 10)	27.5	32.5	–	–	–	–	kV
Output power (mean) (see note 10)	400	–	400	–	440	–	W
Frequency (see notes 11 and 12)	2900	3100	–	–	–	–	MHz
R.F. bandwidth at ¼ power (see note 12)	–	2.5	–	–	–	–	MHz
Frequency pulling (v.s.w.r. not less than 1.5:1)	–	15	–	–	–	–	MHz
Stability (see notes 10 and 13)	–	0.5	–	–	–	0.5	%
Heater current						see note 14	
Temperature coefficient of frequency						see note 15	

LIFE TEST

The quality of all production is monitored by the random selection of tubes which are then life-tested under Oscillation 1 conditions. If the magnetron is to be operated under conditions other than those specified herein, English Electric Valve Company Ltd. should be consulted to verify that the life of the tube will not be impaired.

End of Life Criteria (under Test Conditions Oscillation 1)

Output power (mean)	320	W min
R.F. bandwidth at ¼ power	2.5	MHz max
Stability (see note 13)	1	% max

NOTES

1. The magnetron is designed for use with a separate magnet which must conform with the specification given on page 14. The axis of the magnetic field must be coincident with the axis of the anode, and the *north pole of the magnet must be adjacent to the cathode terminal.* The recommended magnet, type MA244, is available from English Electric Valve Company Ltd. If an electro-magnet is used, the pole tip dimensions should be as shown on page 15.
2. With no anode input power.

   During high voltage operation it is essential to operate the heater according to the following schedule:

Mean Input Power (W)	Heater Voltage (V)
1000–1200	8.0
800–1000	10.5
600–800	13
400–600	15
less than 400	16

   The above schedule is valid only for pulse repetition rates of 300p.p.s. or greater.

   The magnetron heater must be protected against arcing by the use of a minimum capacitance of 4000pF shunted across the heater directly at the input terminals; in some cases a capacitance as high as 2μF may be necessary depending on the equipment design. For further details see the Magnetron Preamble.

3. It has been verified that the magnetron will operate at ambient temperatures as low as −55°C. At this temperature the minimum cathode pre-heating time is 3 minutes.

4. Tuning is achieved by rotating a splined shaft which can be fitted to the magnetron in two positions as shown on the outline drawing.

5. The anode temperature must be kept below the limit specified by means of a suitable flow of air over the cooling fins.

6. The various parameters are related by the following formula:

$$Pi = i_{apk} \times v_{apk} \times Du$$

where Pi = mean input power in watts

i_{apk} = peak anode current in amperes

v_{apk} = peak anode voltage in volts

and Du = duty cycle.

7. The rate of rise of voltage is the slope of the steepest tangent to the leading edge of the voltage pulse above 80% amplitude. Any capacitance used in the viewing system must not exceed 6.0pF.

8. The mounting plate and the guard pipe are fitted to the magnetron in a manner to permit pressurizing of the input and the output circuit of the magnetron. At the maximum pressure of 45 lb/in^2 (3.2kg/cm^2) absolute, the leakage will not exceed 0.5 litre (N.T.P.) per minute.

9. Tolerance ±10%.

10. These tests are carried out with the magnetron tuned to 2900, 3000 and 3100MHz.

11. The magnetron will tune over the indicated frequency range.

12. The r.f. spectrum is checked to ensure that there is no degeneration as the magnetron is tuned through the frequency range. The specification limit for bandwidth applies over the whole of the tuning range.

13. With the magnetron operating into a v.s.w.r. of 1.5:1 phased to give maximum instability. Pulses are defined as missing when the r.f. energy level is less than 70% of the normal energy level within a ±1% frequency range of the normal operating frequency. Missing pulses are expressed as a percentage of the number of input pulses applied during the last 3 minutes of a test interval not to exceed 6 minutes.

14. Measured with heater voltage of 16 V and no anode input power, the heater current limits are 2.8 A minimum, 3.4 A maximum.
15. Design test only. The maximum frequency change with anode temperature change (after warming) is −0.07 MHz/°C.

☆ HEALTH AND SAFETY HAZARDS

EEV magnetrons are safe to handle and operate, provided that the relevant precautions stated herein are observed. English Electric Valve Company does not accept responsibility for damage or injury resulting from the use of electronic devices it produces. Equipment manufacturers and users must ensure that adequate precautions are taken. Appropriate warning labels and notices must be provided on equipments incorporating EEV devices and in operating manuals.

High Voltage

Equipment must be designed so that personnel cannot come into contact with high voltage circuits. All high voltage circuits and terminals must be enclosed and fail-safe interlock switches must be fitted to disconnect the primary power supply and discharge all high voltage capacitors and stored charges in the electronic devices before allowing access. Interlock switches must not be bypassed to allow operation with access doors open.

R.F. Radiation

Exposure to r.f. fields can be a hazard even at relatively low frequencies. All r.f. connectors must be correctly fitted before operation so that no leakage of r.f. energy can occur and the r.f. output must be coupled efficiently to the load. It is particularly dangerous to look into open waveguide or coaxial feeders while the device is energized. Screening of the cathode side arm of high power magnetrons may be necessary.

X-Ray Radiation

High voltage magnetrons emit a significant intensity of X-rays not only from the cathode sidearm but also from the output waveguide. These rays can constitute a health hazard unless adequate shielding for X-ray radiation is provided. This is a characteristic of all magnetrons and the X-rays emitted correspond to a voltage much higher than that of the anode.

☆ Indicates a change

TYPICAL TUNING CHARACTERISTIC

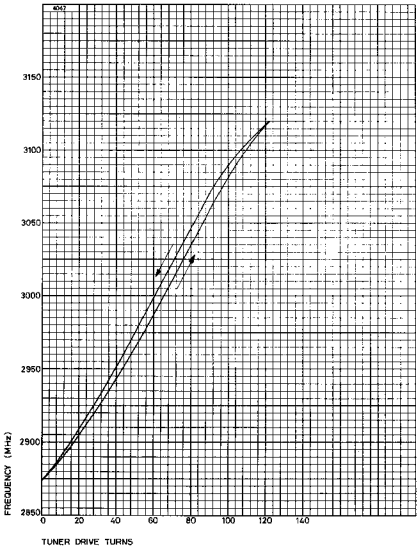

COUPLER (All dimensions without limits are nominal)

This coupler matches the output of the magnetron to a standard $1^5/_8$-inch coaxial line having an outer conductor of 1.527 inch (38.79mm) internal diameter and an inner conductor of 0.625 inch (15.88mm) diameter.

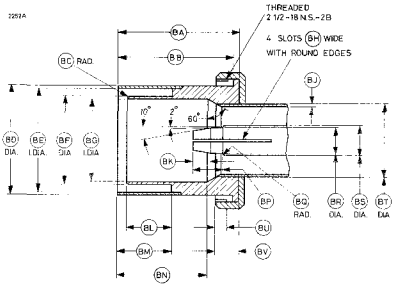

Ref	Inches	Millimetres	Ref	Inches	Millimetres
BA	2.531 ± 0.015	64.29 ± 0.38	BL	0.937 ± 0.003	23.800 ± 0.076
BB	2.402 ± 0.005	61.01 ± 0.13	BM	1.125 ± 0.003	28.575 ± 0.076
BC	0.031 ± 0.015	0.79 ± 0.38	BN	1.875 ± 0.005	47.63 ± 0.13
BD	2.310 ± 0.002	58.674 ± 0.051	BP	0.625 ± 0.015	15.88 ± 0.38
BE	2.185 ± 0.002	55.499 ± 0.051	BQ	0.016 ± 0.015	0.41 ± 0.38
BF	1.875 ± 0.002	47.625 ± 0.051	BR	0.576 ± 0.002	14.630 ± 0.051
BG	1.720 ± 0.002	43.688 ± 0.051	BS	0.625	15.88
BH	0.030	0.76	BT	1.625	41.28
BJ	0.049	1.24	BU	0.250 ± 0.015	6.35 ± 0.38
BK	0.375 ± 0.015	9.53 ± 0.38	BV	0.500 ± 0.015	12.70 ± 0.38

Millimetre dimensions have been derived from inches.

OUTLINE

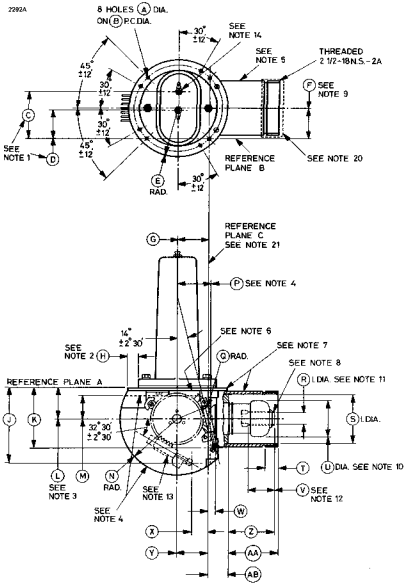
2292A
8 HOLES (A) DIA.
ON (B) P.C.DIA.
30°
±12'
SEE
NOTE 14
SEE
NOTE 5
THREADED
2 1/2-16N.S.-2A
(F) SEE
NOTE 9
45°
±12'
30°
±12'
(C)
30°
±12'
45°
±12'
SEE
NOTE 1
(D)
REFERENCE
PLANE B
SEE NOTE 20
(E)
RAD.
30°
±12
REFERENCE
PLANE C
SEE NOTE 21
(G)
(P) SEE NOTE 4
14°
±2°30'
SEE NOTE 6
SEE
NOTE 2 (H)
(Q) RAD.
SEE NOTE 7
SEE NOTE 8
(R) I.DIA. SEE NOTE 11
REFERENCE PLANE A
(J)
(K)
32°30'
±2°30'
(S) I.DIA.
(T)
(U) DIA. SEE NOTE 10
(L)
SEE
NOTE 3
(M)
(N)
RAD.
SEE
NOTE 13
(V) SEE
NOTE 12
SEE
NOTE 4
(W)
(X)
(Z)
(Y)
(AA)
(AB)

Outline Dimensions (All dimensions without limits are nominal)

Ref	Inches	Millimetres	Ref	Inches	Millimetres
A	0.210 ± 0.005	5.33 ± 0.13	T	0.593 min	15.06 min
B	4.064 ± 0.006	103.23 ± 0.15	U	1.620 max	41.15 max
C	2.156	54.76	V	1.125 min	28.58 min
D	1.359	34.52	W	0.313	7.95
E	2.281 ± 0.015	57.94 ± 0.38	X	0.756	19.20
F	1.437 ± 0.020	36.50 ± 0.51	Y	1.437	36.50
G	1.437	36.50	Z	2.085 ± 0.025	52.96 ± 0.64
H	0.500 min	12.70 min	AA	2.297 ± 0.010	58.34 ± 0.25
J	3.500	88.90	AB	0.818 ± 0.015	20.78 ± 0.38
K	2.812	71.42	AC	6.313 ± 0.094	160.4 ± 2.4
L	1.440	36.58	AD	0.187	4.75
M	1.063 min	27.00 min	AE	1.440 ± 0.020	36.58 ± 0.51
N	2.656 max	67.46 max	AF	0.025	0.64
P	1.500 min	38.10 min	AG	0.563 ± 0.125	14.30 ± 3.18
Q	1.500 min	38.10 min	AH	0.575 ± 0.050	14.61 ± 1.27
R	0.555 ± 0.005	14.10 ± 0.13	AJ	1.740 max	44.20 max
S	2.321 ± 0.007	58.95 ± 0.18			

Millimetre dimensions have been derived from inches.

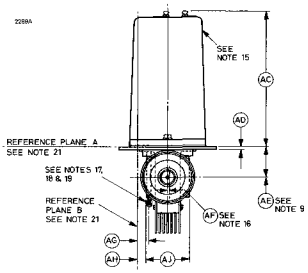

Outline Notes

1. The centres of the jack holes will be within a radius of 0.100 inch (2.54mm) of the location specified but spaced 0.797 ± 0.015 inch (20.24 ± 0.38mm) with respect to each other.
2. With the magnetron resting on a plane surface, the flatness of this annular area will be such that a feeler gauge 0.015 inch (0.38mm) thick and 0.125 inch (3.18mm) wide will not enter more than 0.250 inch (6.35mm) at any point.
3. The periphery of the anode will lie within a 2.160 inches (54.86mm) diameter circle located as specified for the non-tunable side of the anode.
4. The maximum width specified by dimension AJ applies to the area defined by the broken line and the circumference of the radiator.
5. The magnetron will be painted with black, heat resisting non-corrosive paint, except for the following paint free areas: top surface of mounting plate, parts above mounting plate, screw threads on guard pipe, all surfaces inside guard pipe, tuning gear, stop, and worm shaft assembly.
6. All joints on the mounting plate and guard pipe will be soldered to provide hermetic seals.
7. The magnetron may be supported by the mounting plate or guard pipe.
8. There will be no sharp edges on the outside diameter at the end of the inner conductor.
9. Applies to the location of the centre line of the guard pipe only.
10. The centre line of the maximum diameter will be concentric with the centre line of the guard pipe to within 0.040 inch (1.02mm).
11. Applies to the inner conductor insert only. The centre line of the inner conductor insert will be concentric with the centre line of the guard pipe to within 0.025 inch (0.64mm).
12. Applies to the straight portion of the inner conductor wall.
13. Optional location of tuning spline. The magnetron will be supplied with the spline located as specified by the customer.

14. Hexagon locking head banana pin jack, hole 0.169 ± 0.005 inch (4.29 ± 0.13mm) diameter x 0.593 inch (15.06mm) long as per Mil-E-1, latest issue.

15. The common cathode connection is marked with letter C.

16. This dimension shows the relation between a plane passing through the lateral centre of the anode, and a plane passing through the centre of the guard pipe.

17. The tuning mechanism will provide the full range of tuning with a maximum of 4 complete revolutions of the large tuning gear.

18. The spline for adjusting the tuning mechanism is as follows: 12 teeth, 48 d.p., involute form.

19. The clearance between the tuning spline and the guard pipe will be sufficient to allow the use of S.S. White No. 2666X end fitting ($^{13}/_{32}$ inch diameter).

20. Protective guard for shipping purposes.

21. Reference plane A is defined as a plane passing along the face of the mounting plate.

    Reference plane B is defined as a plane perpendicular to plane A and passing through the centre of the holes shown.

    Reference plane C is defined as a plane mutually perpendicular to planes A and B and passing through the centre of the hole as shown.

SPECIFICATION OF PERMANENT MAGNET MA244

(All dimensions without limits are nominal)

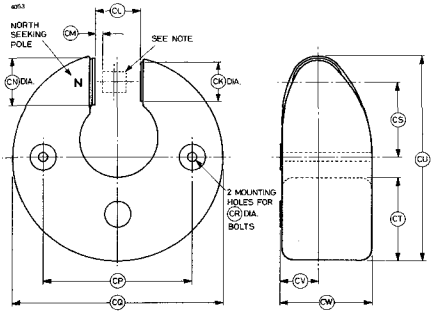

Ref	Millimetres	Inches	Ref	Millimetres	Inches
CK	41.27	1.625	CR	7.94	0.313
CL	45.72 ± 0.13	1.800 ± 0.005	CS	79.0	3.110
CM	6.86	0.270	CT	90.0 max	3.543 max
CN	50.80	2.000	CU	220.0 max	8.661 max
CP	152.4	6.000	CV	36.58 ± 0.25	1.440 ± 0.010
CQ	220.0 max	8.661 max	CW	100.0 max	3.937 max

Inch dimensions have been derived from millimetres except dimension CM.

Net weight of MA244 . . . . . 36 pounds (16.5kg) approx

Note The total variation of magnetic field within a cylinder 1.000 inch (25.4mm) long and 0.900 inch (22.86mm) diameter situated as shown and coaxially between the poles must not exceed 28mT (280 gauss).

ELECTRO-MAGNET POLE PIECES

Magnet with Single Conventional Pole Piece

Magnet with Distortion Pole Piece

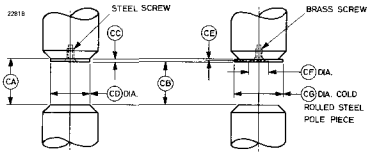

Ref	Inches	Millimetres
CA	1.925 ± 0.005	48.90 ± 0.13
CB	1.800 ± 0.005	45.72 ± 0.13
CC	0.125 ± 0.015	3.18 ± 0.38
CD	1.625 ± 0.015	41.28 ± 0.38
CE	0.031 ± 0.015	0.79 ± 0.38
CF	0.786 ± 0.005	19.96 ± 0.13
CG	2.000 ± 0.015	50.80 ± 0.38

Millimetre dimensions have been derived from inches.

Whilst EEV has taken care to ensure the accuracy of the information contained herein it accepts no responsibility for the consequences of any use thereof and also reserves the right to change the specification of goods without notice. EEV accepts no liability beyond that set out in its standard conditions of sale in respect of infringement of third party patents arising from the use of tubes or other devices in accordance with information contained herein.