Preliminary
SPECIFICATION

M41EAA250WB00

41 cm / 17 inch
rectangular monochrome CRT
landscape format

Modifications may be agreed upon after evaluation of about 200 products

Contents Page

APPLICATION	3
TECHNICAL RESPONSIBILITY	4
DISTRIBUTION LIST	5
CHARACTERISTICS	6
IMPORTANT NOTES	7
MECHANICAL DATA	8
MAXIMUM OF NON-DEFLECTED SPOT LANDING	9
OPTICAL DATA	10
PERMISSIBLE GLASS AND SCREEN DEFECTS	11
RESOLUTION (AT 50 % OF PEAK VALUE)	13
ELECTRICAL DATA	14
ABSOLUTE LIMITING VALUES	15
GRID DRIVE CHARACTERISTICS	17
ENVIRONMENTAL CONDITIONS	18
ESTIMATED LIFE TIME	19
ISO-EXPOSURE CALCULATED FOR 5 µSV/H	20
ISO-EXPOSURE CALCULATED FOR 1 µSV/H	21
PACKAGING	22
ATTACHMENT 1)	23

Application

For displays in medical and alphanumerical applications.

Technical responsibility

The committed details in this specification are obligatory upon both parties.

Changes and supplements to this specification during the development require the agreement of all persons responsible.

Responsible for the contents of this document are:

Company/Department	*Name*	*Tel.*	*Date*	*Signature*

Distribution list

	Name	Date	Release #	Copy #
			1.0	
			1.0	

Characteristics

- High resolution
- 110° 29 mm neck
- High contrast
- High luminance
- Flat & square colour bulb (low browning glass)
- Multicoated panel
- Conductive coated against charging
- Intrinsically safe
- Long life time
- Low phosphor noise
- Low drift
- Protected against internal flash

Important notes

Implosion hazard	CRT's are evacuated. In case of mechanical damage (e.g. by shock or scratches) implosion may occur.
CRT is labelled according	UL 1418 MPR II
High voltage	For reasons of the CRT's capacities, the anode connection can conduct high voltage for a long time after high voltage has been switched off.
X-ray emission	When operating the CRT within the limits, the x-ray dose rate will be under the allowed value of 1 µSv/h (equivalent to: 0.1 mR/h). The tube is an intrinsic CRT type according the RöV (German Röntgenverordnung) dated Jan, 8th 1987, Part I; Attachment III, paragraph 6.

Mechanical data

Useful screen	- Screen diagonal	min. 409.8 mm
	- Screen width	min. 329.0 mm
	- Screen height	min. 248.1 mm
Inner radius of glass-bulb panel	Diagonal Axis	R = 1130 mm
	Long Axis	R = 1130 mm
	Short Axis	R = 1130 mm
Position of operation	Anode connector on the right side (front view)	
Socket	JEDEC B7-218	
Neck diameter	28.6 ± 0.7 mm	
Anode connector	Bulb contact 7.92	J1–21
Deflection yoke	-	
Weight	Approx. 7,2 kg	
Mechanical outlines	See attachment 1)	
Overall length	max. 315 mm	
Base Configuration	See attachment 2)	

Maximum of non-deflected spot landing

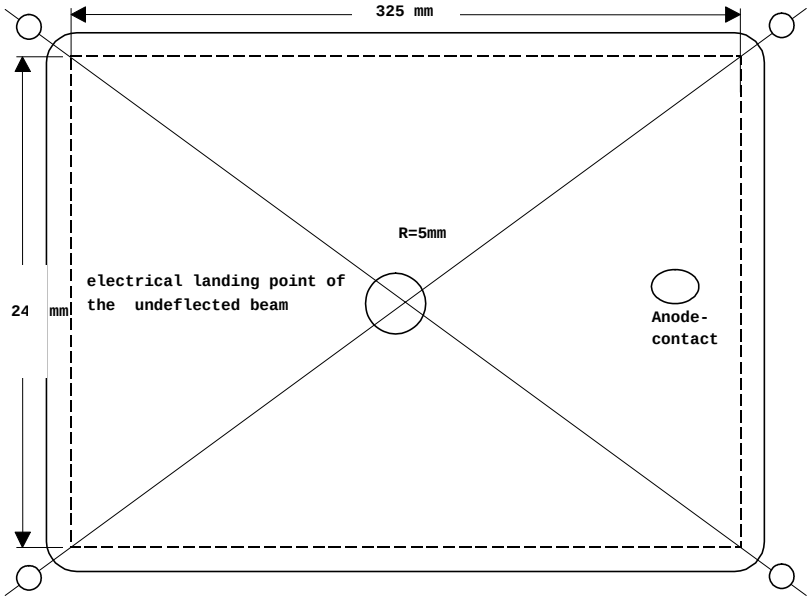

- Phosphor material must be everywhere within a window of 244 × 325 mm. The centre of that phosphor window matches the mechanical centre of the CRT.
- The non-deflected spot landing must be within a circle with a radius of 3 mm around a point 3 mm left and 2 mm down from the mechanical centre of the CRT, provided that:
  - the CRT axis is in east-west direction and the front panel is facing east,
  - the anode connector is located on the right,
  - the deflection unit has been mounted to the tube,
  - there is a metal shield behind the deflection unit around the tube neck.
- The maximum rotation angle of the deflection unit may not exceed 0.2°.

Optical data

Total transmission of bulb including coating / panel.	Approx. 27 % at 546 nm	
Phosphor	P45	
Colour co-ordinates: (during operation at a luminance of 250 cd/m^2)	x = 0.250 ± 0.01 y = 0.320 ± 0.01	measured with LMT Colormeter or Minolta CA100 adjusted to P45
Front panel	Transmission 60 % (at 546 nm) Pilkington / Flabeg OEL-65 or equivalent Anti-static < 2 kΩ/□ The connection of the coating with the mounting device will be guaranteed 100 000 switch-on / switch-off cycles.	
Uniformity of luminance	At a luminance level of 60 cd/m^2 the luminance deviation between the centre and any point of the screen may not exceed 15 cd/m^2.	
Glass bulb	NEG 17” 110° H28.6 or equivalent	
Copper Strip Connection Getter mounting Silicon diameter Label Location	See attachment 2 On top of gun > 80 mm See attachment 1)	

Permissible Glass and Screen Defects

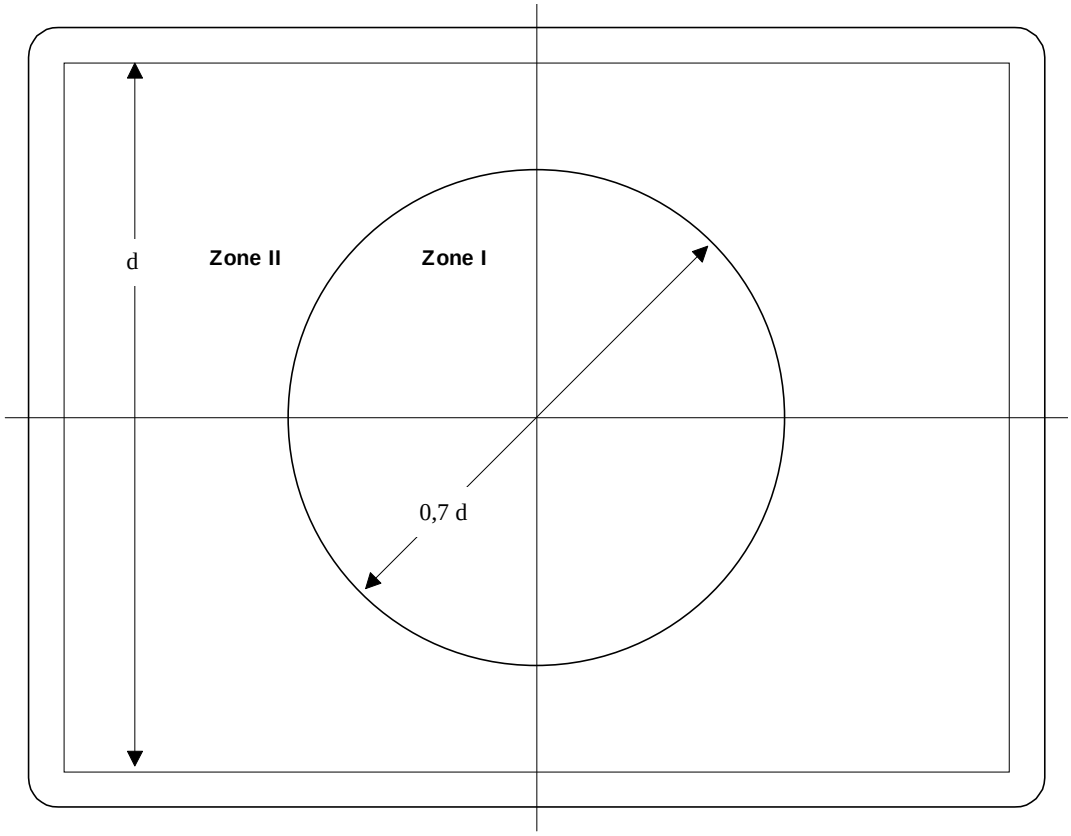

d = 244 mm

Defect size G for the screen and glass specification

L: max. lenght of defect

B: max. width of defect

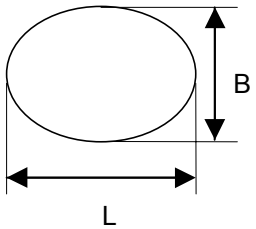

for a side ratio of $L/B \leq 3$ $G = (L + B)/2$

for a side ratio of $L/B > 3$ $G = L/20 + 2B$

Permissible defects inclusive Panel

Defect size G in mm	Number of defects		
	Zone I	Zone II	Sum [1)]
≤ 0.2	Any, but no accumulation		
0.2 < G ≤ 0.4	2	3	4
0.4 < G ≤ 0.6	-	3	3
Distance between defects	≥ 50 mm	≥ 50 mm	

[1)] Maximum number of all defects in zone I + II : 4

The maximum number of phosphor defects with defect size 0,1 < G ≤ 0,2 within in area of 30 × 30 mm : 3.

Permissible panel scratches:

Sum ≤ 2, distance ≥ 50 mm, max. length/scratch ≤ 10 mm, max. width ≤ 50 µm.

All defects are measured with Peak Stand Micro 25×

Resolution (at 50 % of peak value)

Limiting values

625 lines / 25 Hz

U_a = 19 kV

U_{g2A} = 700 V

Cathode drive

Duty cycle = 100 %

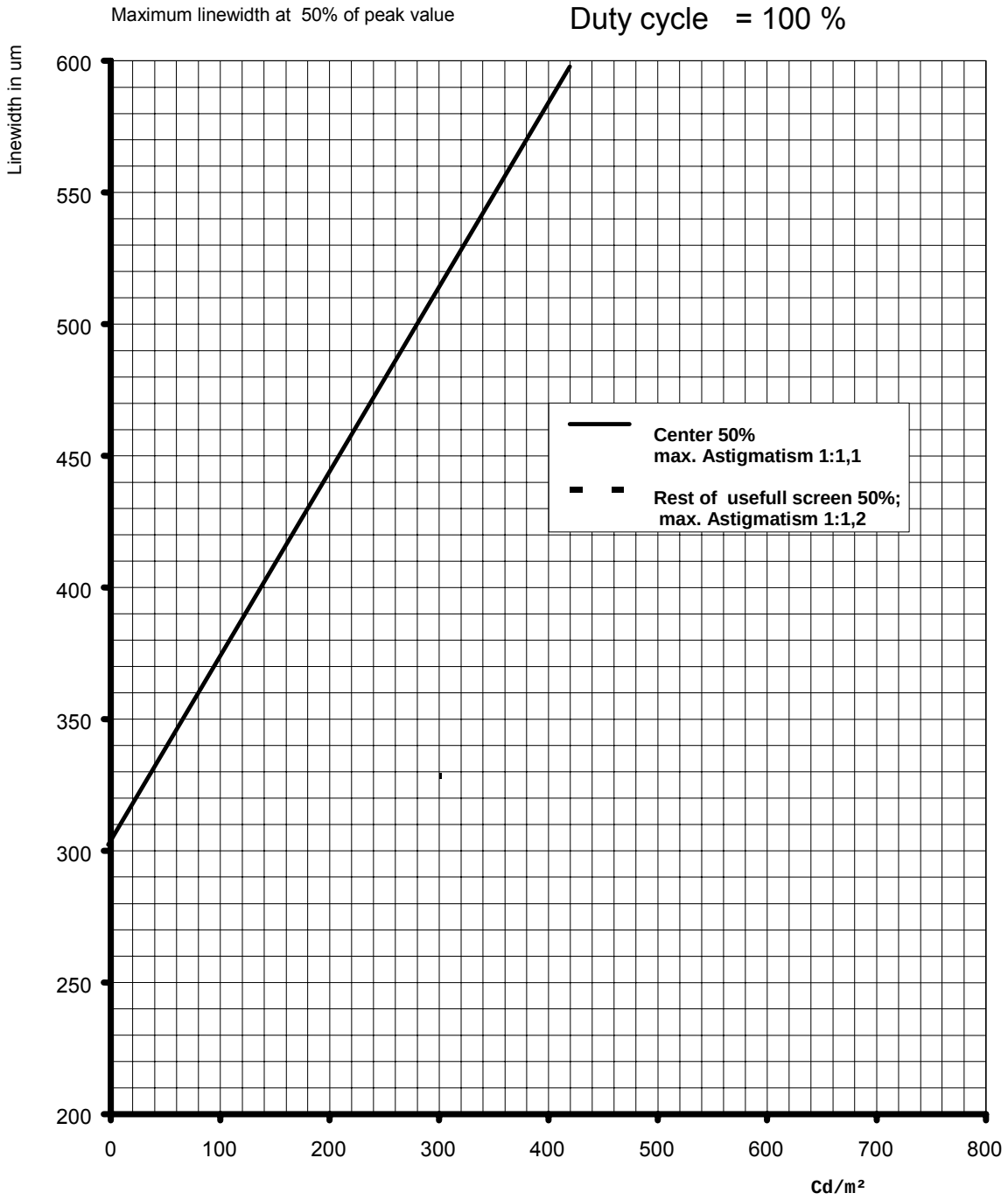

The focus is adjusted at 100 cd/m² and it is not allowed to readjust the focus voltage during the measurement.
Measured with PDS spotvision system or Microvision SS100

Electrical data

Deflection	Magnetically
deflection angle:	- horizontal approx. 99° - vertical approx. 84° - diagonal approx.110°
Focussing	Electrostatic
Maximum leakage * currents	Ig2 ± 5 µA Ig4 ± 25 µA
Capacity (Grid 1 to all other electrodes)	C_{g1} < 8 ± 1pF
Capacity (Cathode to all other electrodes)	C_{Cat} 3 ± 1 pF
Capacity (Focus to all other electrodes)	C_{g3} 4 ± 1 pF
Capacity (Anode to outer coating)	C 600 – 1500 pF

Absolute limiting values

Cathode is reference point for all voltage values

First accelerating voltage	U_{g2A}	max. 1000 V min. 400 V
Second accelerating voltage	U_a	max. 21 kV min. 13 kV
Focus voltage	U_{g3}	max. 1000V -200 V
Grid1 voltage	$-U_{g1}$	max. 400 V min. 3 V
Heating against cathode	U_{hc}	100 V
	I_{hc}	max. 15 µA

Anode current

Long time average value	max. 300 µA
Peak value	max. 800 µA

Operating values

Cathode heating	- Indirect		
	- Heating voltage	U_h	6.15 V +2 % / -5 %
	- Heating current	I_h	approx. 240 mA

Cathode is reference point for all following voltage values

First accelerating voltage	U_{g2}	700 V
Grid 1 voltage (for spot suppression)	$-U_{g1}$	max. 120 V min. 60 V
Second accelerating voltage	U_a	19 kV
Drive voltage (grid drive) (from I_C = 0 µA to I_C = 800 µA) at U_a = 19 kV U_{g2} = 700 V (Spot cut-off) Duty cycle = 100 %	ΔU_{g1}	max. 70 V
Focus voltage (at centre of screen at I_C = 100 µA)	U_{g3}	min. 0 V max. 400 V
Dynamic focus voltage with reference yoke	$U_{g3\ dyn.}$	max. 450 V

Grid drive characteristics

Ua = 27.5 kV
U_{g2A} = 600 – 930 V
U_{g2B} = 50 – 250 V
$U_{spot\ cut\text{-}off}$ = 105 V
Duty Cycle = 100 %

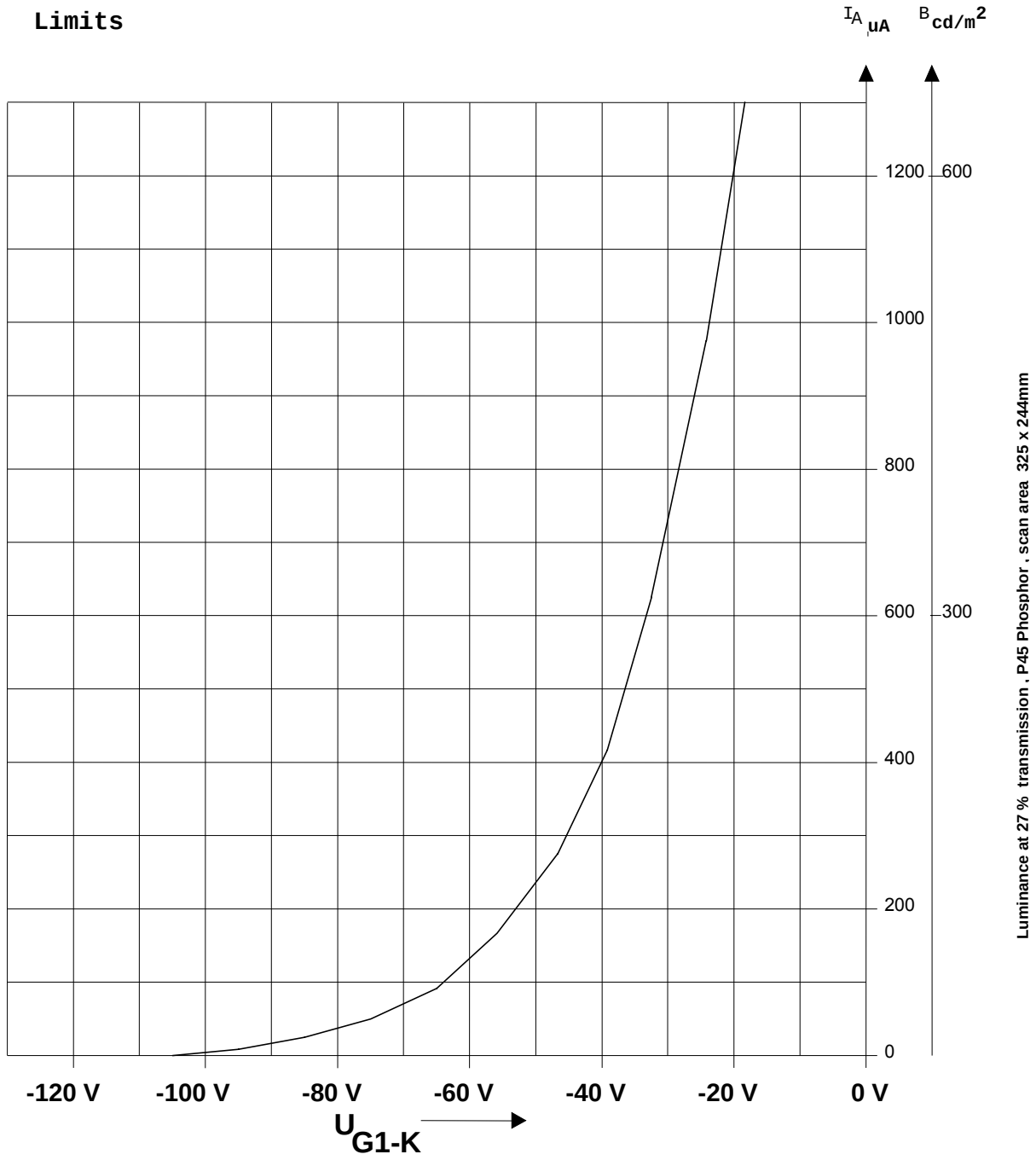

Environmental conditions

Temperature range:

Operation	0 to + 70 °C Max. relative humidity 75 % Non-condensing
Storage	- 25 to + 70 °C

Max. temperature gradient	20 °C/h

Air pressure	400 hPa – 1060 hPa

Estimated life time

Decrease of measured brightness of 350 Cd/m² at constant drive.

After 2000 hours	< 25 %
After 10 000 hours	< 30 %
After 20 000 hours	< 35 %

Burning Conditions	Duty cycle = 100% Scan frequency = 15 kHz Scan area 325 x 244 mm

Iso-exposure Calculated for 5 µSv/h

Rate Limit Curve

Calculated for 5 µSv/h

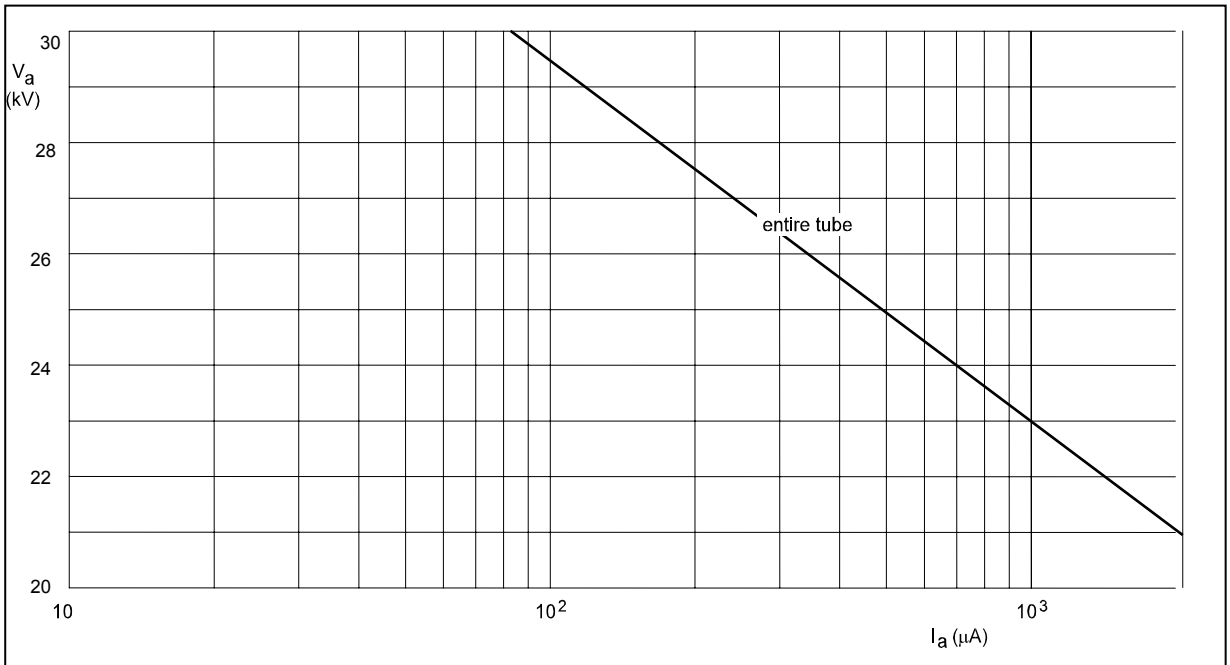

Measured values at 5 cm from the surface of the non absorbing cabinet surrounding the CRT

The X–radiation emitted will not exceed 1 µSv/h for anode voltage and current combinations shown in the iso-exposure-rate limit curve, according to Eigensichere Kathodenstrahlröhre nach "*Anlage III Röntgenverordnung".*

Iso-exposure Calculated for 1 µSv/h

Rate Limit Curve

Calculated for 1 µSv/h

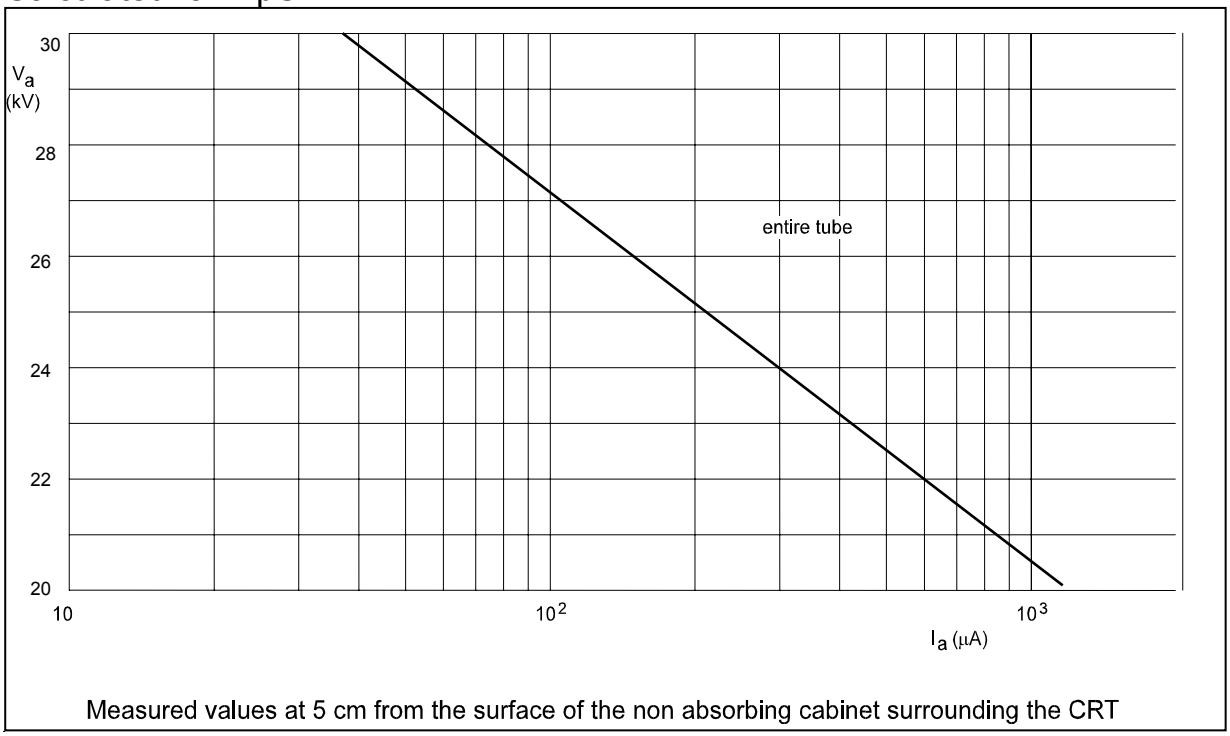

The X–radiation emitted will not exceed 1 µSv/h for anode voltage and current combinations shown in the iso-exposure-rate limit curve, according to Eigensichere Kathodenstrahlröhre nach "*Anlage III Röntgenverordnung".*

Packaging

Packaging t.b.f.
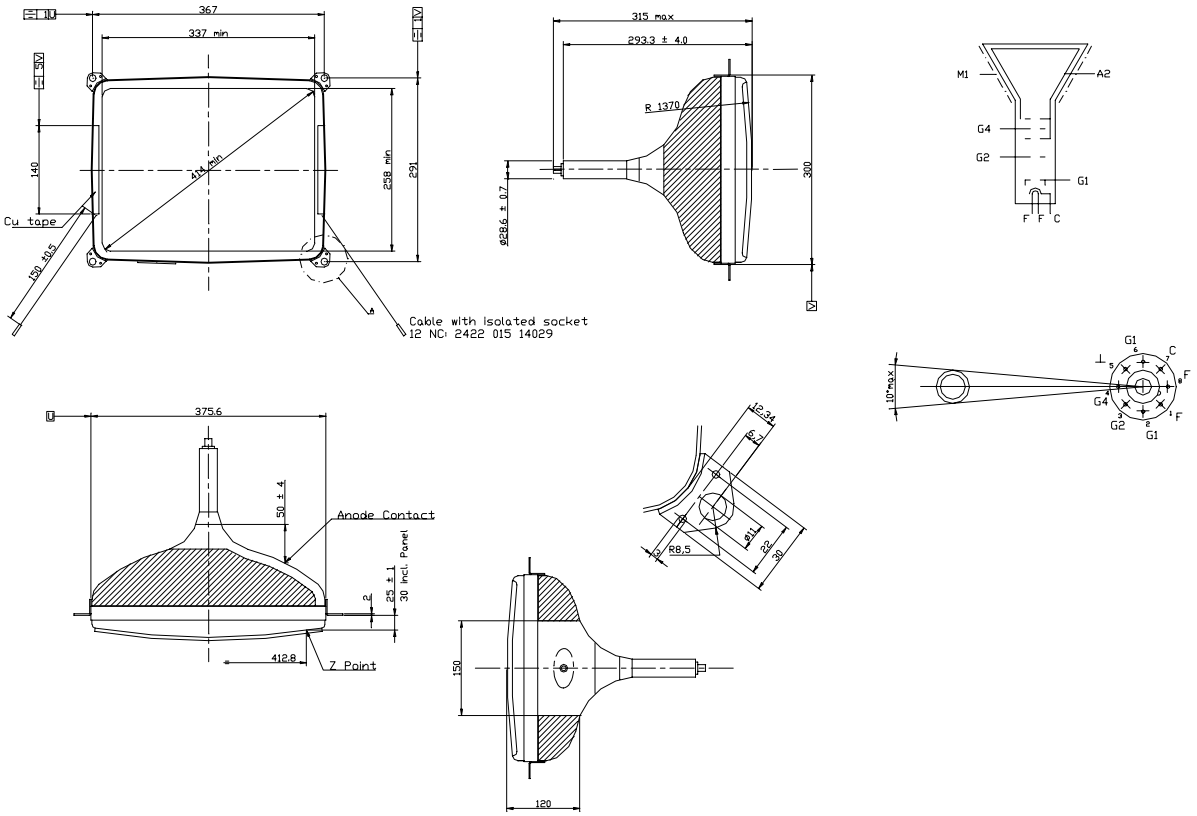
Attachment 1)