VERY HIGH RESOLUTION CATHODE-RAY TUBE

The M38-200 is a 38 cm, 70° data graphic display tube with a resolution of more than 6,6 line pairs per mm (corresponding to 3000 TV lines). Used in conjunction with deflection unit AT1991 it is eminently suitable for full page document display.
The resolution easily meets the stringent requirements of the CCITT recommendations for digital group III, high resolution facsimile transmission, and those of graphic displays for computer-aided design.

Tubes with white (WA and WE) or green (GH) screen phosphors are standard; the WE phosphor is recommended for photographic applications. Other phosphors are available to special order. The tubes have a metal-backed screen and rim band for implosion protection.

QUICK REFERENCE DATA

Deflection angle	70°
Face diagonal	38 cm
Overall length	478 mm
Neck diameter	36,8 mm
Screen dimensions	226 mm x 291 mm
Resolution	3000 TV lines* ← 1800 lines* ← (shrinking raster)

* Landscape format.

ELECTRICAL DATA

Capacitances		
cathode to all other electrodes	C_k	4 pF
grid 1 to all other electrodes	C_{g1}	12 pF
final accelerator to external conductive coating	$C_{g3, g5(l)/m}$	1000 pF
final accelerator to tension band	$C_{g3, g5(l)/m'}$	220 pF
Focusing method	electrostatic	
Deflection method	magnetic*	
Deflection angle	approx. 70°	
Heating	indirect by AC or DC	
heater voltage	V_f	6,3 V ± 5 %
heater current	I_f	190 mA**

OPTICAL DATA

Screen	metal-backed phosphor		
Phosphor type	GH	WA	WE
fluorescent colour	green	white	white
persistence	medium	medium	medium
	short		short
Screen dimensions	226 mm x 291 mm		
Minimum useful screen diagonal	352 mm		
Preferable useful scanning area	200 mm x 270 mm		
Reduction for A4 size (297 mm x 210 mm)	9%		
Reduction for 11" x 8½" size (279 mm x 216 mm)	7,4%		
Light transmission of screen	approx. 50%		

* To obtain the best tube performance, deflection unit AT1991 should be used.
** Liable to be modified into 240 mA.

MECHANICAL DATA

Overall length	478 ± 6,5 mm
Neck diameter	36,8 ± 0,8 mm
Base	JEDEC B12-246
Final accelerator contact	cavity contact, CT8; IEC 67-III-2
Mounting position	any
Implosion protection	rim band
Net mass	approx. 6 kg
Accessories	
socket	type 55589
final accelerator contact connector	type 55563A
deflection unit	type AT1991

MECHANICAL DATA (continued)

Dimensions in mm

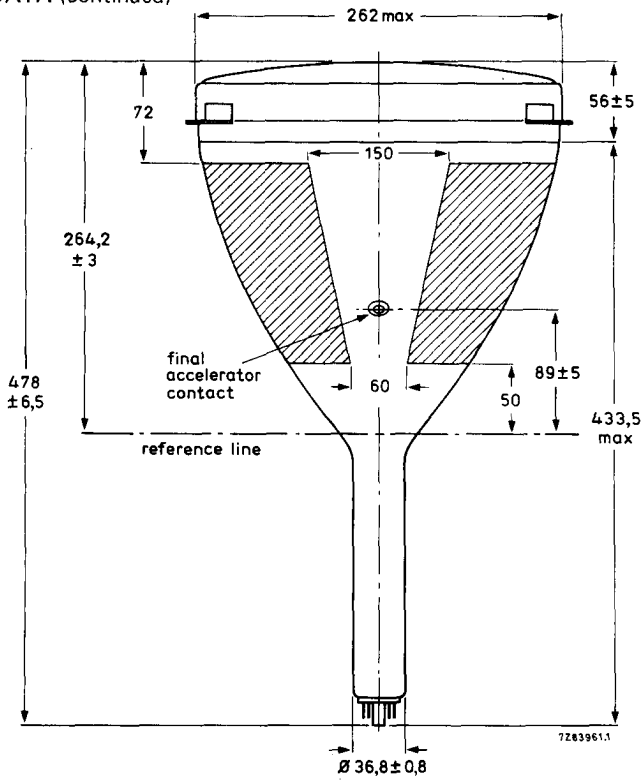

Fig. 1a.

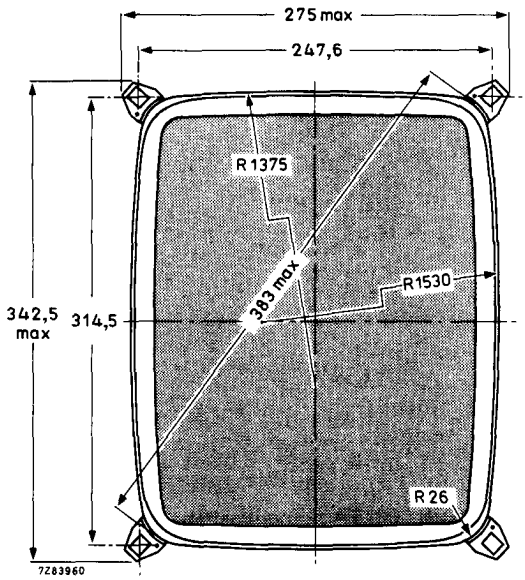

Fig. 1b.

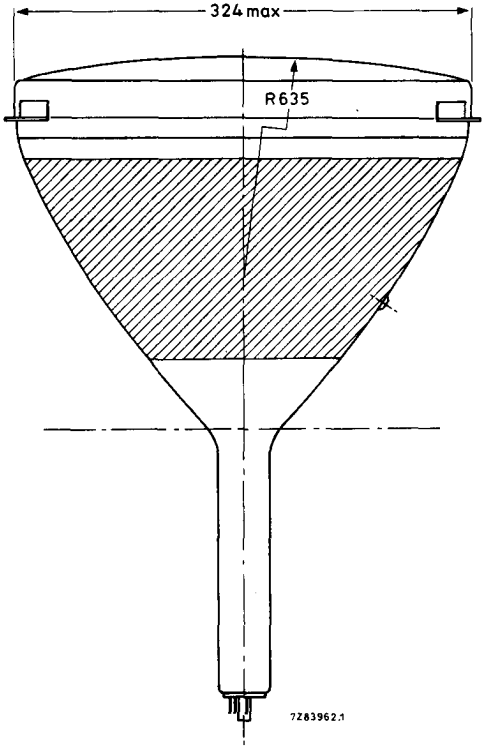

Fig. 1c.

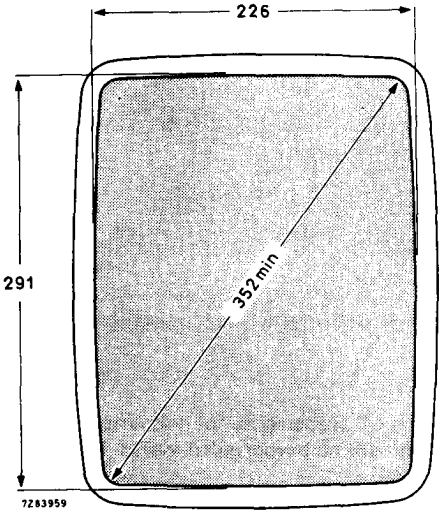

Fig. 2.

MECHANICAL DATA (continued)

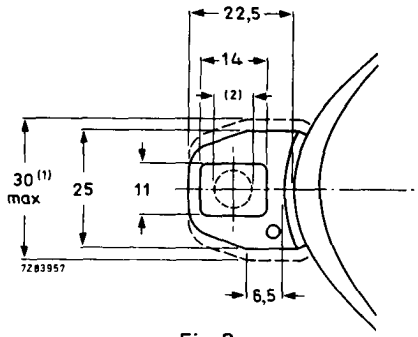

Fig. 3.

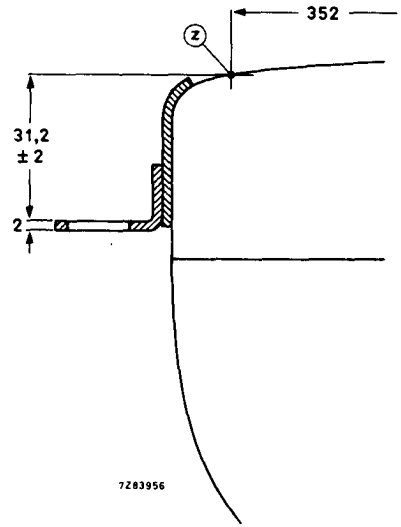

Fig. 4.

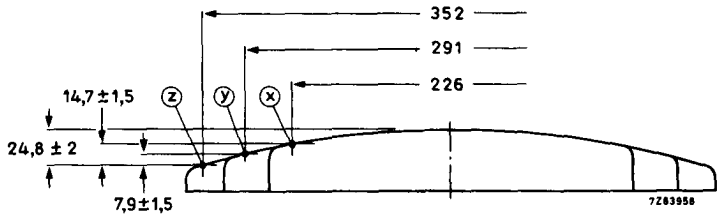

Fig. 5.

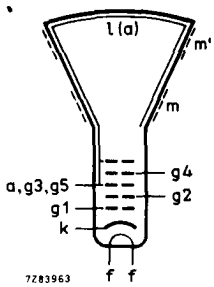

Fig. 6.

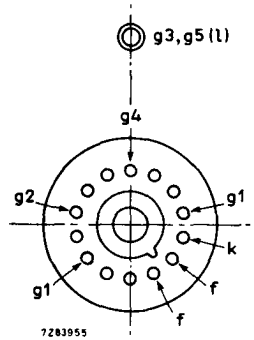

Fig. 7.

Notes

1. Minimum space to be reserved for mounting lugs.
2. The mounting screws in the cabinet must be situated within a circle with a diameter 7,5 mm drawn around the true geometrical positions (corners of a rectangle of 314,5 mm x 247,6 mm).

Reference line gauge, JEDEC 110

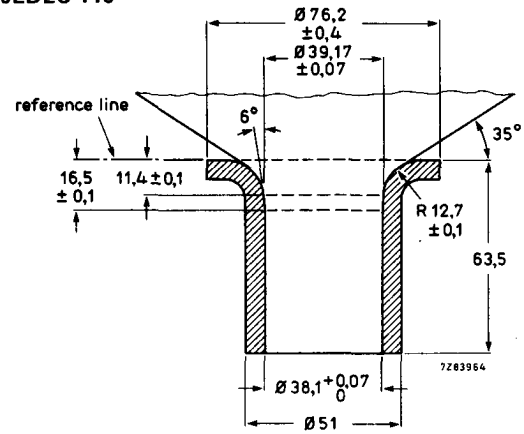

Fig. 8.

RECOMMENDED OPERATING CONDITIONS; voltages with respect to cathode* ←

Final accelerator voltage	$V_{g3, g5}$	18	kV
Focusing electrode voltage	V_{g4}	5 to 7	kV**
Dynamic focusing	ΔV_{g4}	200 to 300	V▲
First accelerator voltage	V_{g2}	800	V
Cut-off voltage for visual extinction of focused spot	$-V_{g1}$	50 to 110	V
Grid drive for 30 μA screen current	V_d	approx. 20	V

RESOLUTION

With a beam current (I_a) of 30 μA, the spot diameter at a brightness level of 50% is approx. 120 μm (see Fig. 9).

CIRCUIT DESIGN VALUES

Grid 4 current				
positive	I_{g4}	max.	6 μA	←
negative	$-I_{g4}$	max.	6 μA	←
Grid 2 current				
positive	I_{g2}	max.	5 μA	
negative	$-I_{g2}$	max.	5 μA	

* The tube has internal magnetic correction for astigmatism. To avoid changing this correction, the coil must be at zero potential, before being moved on the tube neck.

** For optimum focus at screen centre.

▲ To obtain optimum focus over the whole useful screen area, dynamic correction voltages should be applied in N-S and E-W directions; these voltages should be adjustable separately within the indicated range.

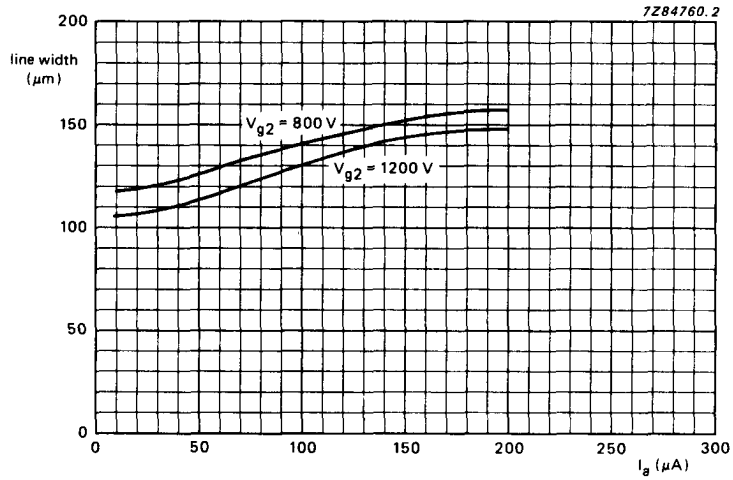

Fig. 9 Resolution.

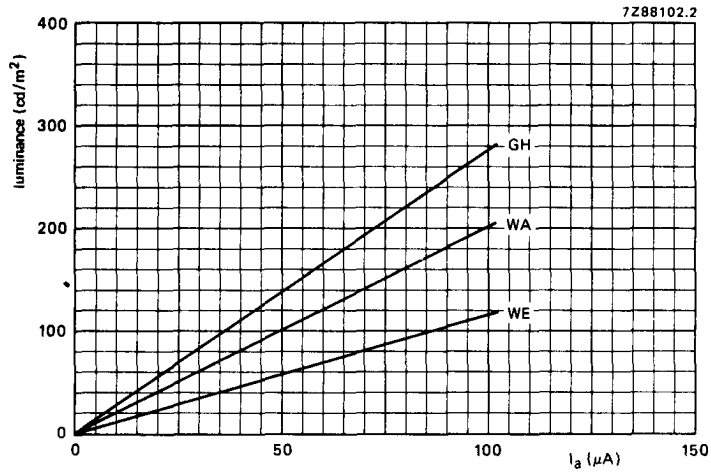

Luminance is measured with a photo-cell, the spectral response of which is identical to that of the human eye, on a 312 lines non-interlaced raster, screen dimensions 226 mm x 291 mm, frame frequency 50 Hz.

Fig. 10 Luminance.

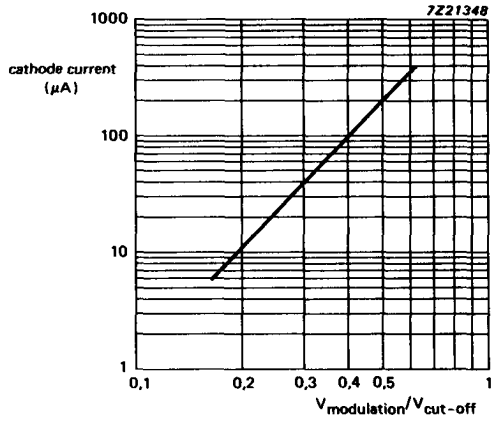

V_{co} = 74,5 V, V_{g2} = 800 V, $V_{g3,g5}$ = 18 kV.

Fig. 11 Grid drive.

LIMITING VALUES (Absolute maximum rating system)

Voltages are specified with respect to cathode unless otherwise stated.

Final accelerator voltage	$V_{g3,\ g5(\ell)}$	max.	20	kV
Focusing electrode voltage	V_{g4}	max.	8	kV
		min.	4	kV
First accelerator voltage	V_{g2}	max.	1,2	kV
Control grid voltage				
negative	$-V_{g1}$	max.	140	V
positive, non-repetitive	V_{g1}	max.	0	V
Cathode to heater voltage				
positive	V_{kf}	max.	250	V
positive peak	V_{kfp}	max.	300	V
negative	$-V_{kf}$	max.	135	V
negative peak	$-V_{kfp}$	max.	180	V

LIMITING CIRCUIT VALUES

Resistance between cathode and heater	R_{kf}	max.	1	MΩ
Impedance between cathode and heater (f = 50 Hz)	Z_{kf}	max.	500	kΩ
Grid 1 circuit resistance	R_{g1}	max.	1,5	MΩ
Impedance between cathode and earth	Z_k	max.	100	kΩ

X-RADIATION

→ See Figs 13 and 14.

FLASHOVER PROTECTION

With the high voltage used with this tube internal flashovers may occur. These may destroy the cathode of the tube. Therefore it is necessary to provide protective circuits, using spark gaps. The spark gaps must be connected as follows:

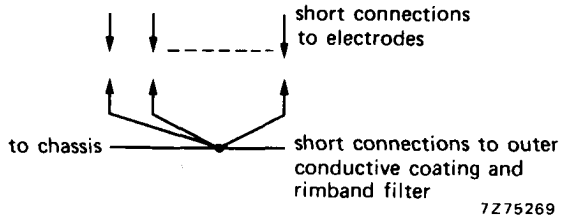

Fig. 12.

No other connections between the outer conductive coating and the chassis are permissible.

X-RADIATION LIMIT

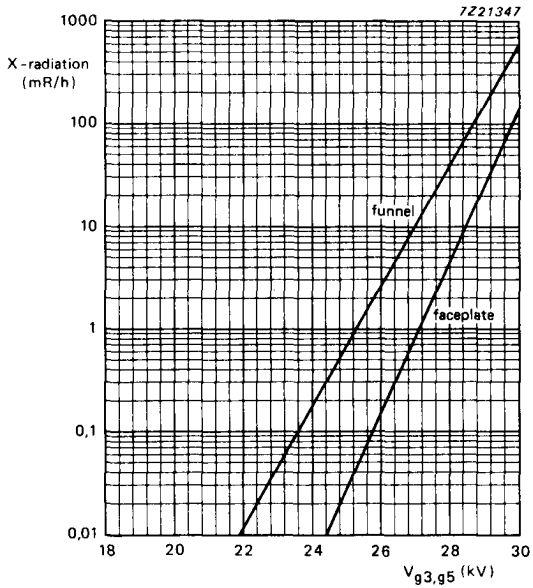

Anode button has no measureable radiation up to 30 kV.

Fig. 13 X-radiation limit curves, at a constant anode current of 250 μA, measured in accordance with TEPAC164.

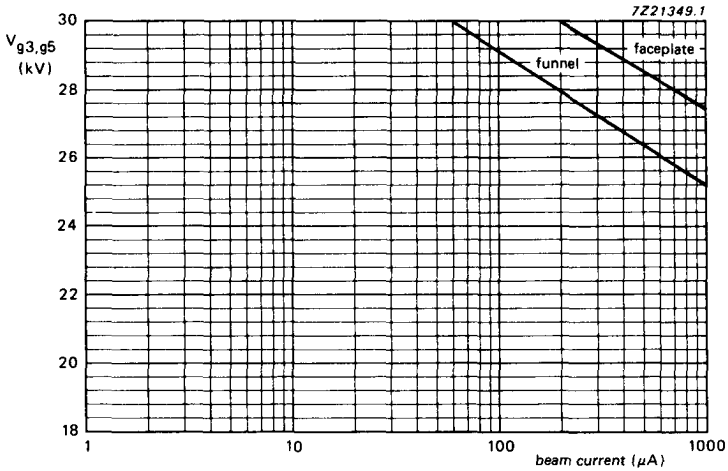

Anode button has no measureable radiation up to 30 kV and 1500 μA.

Fig. 14 0,5 mR/h isoexposure-rate limit curves, measured according to TEPAC164.