MONITOR TUBE

The M31-131W is a 31 cm-diagonal rectangular television tube with integral protection primarily intended for use as a monitor or display tube.

QUICK REFERENCE DATA			
Deflection angle		90 °	
Focusing		electrostatic	
Resolution		900	lines
Overall length	≤	310	mm

SCREEN

Metal backed phosphor

Luminescence		white	
Light transmission of face glass	approx.	50	%
Useful diagonal	≥	295	mm
Useful width	≥	257	mm
Useful height	≥	195	mm

HEATING

Indirect by a.c. or d.c.; parallel supply

Heater voltage	V_f	6,3	V
Heater current	I_f	300	mA

FOCUSING electrostatic

For focusing voltage providing optimum focus at a beam current of 100 μA see under "Typical operating conditions".

DEFLECTION magnetic

Diagonal deflection angle 90 °

Deflection coil AT1071/03 is recommended.

MECHANICAL DATA Dimensions in mm

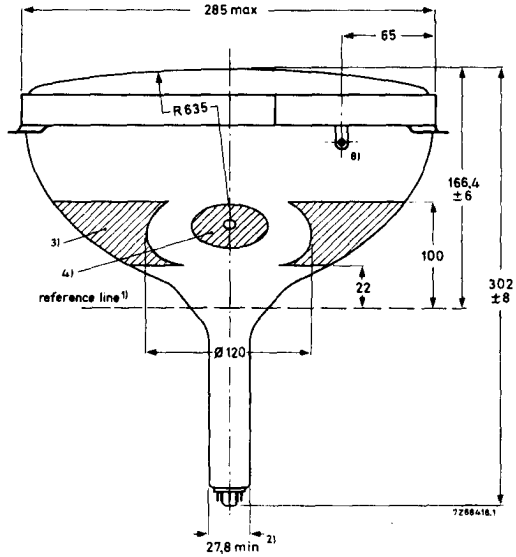

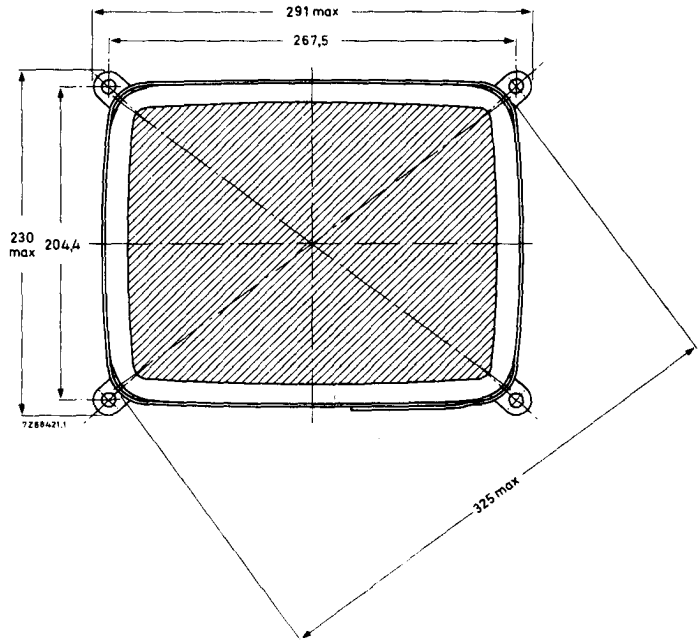

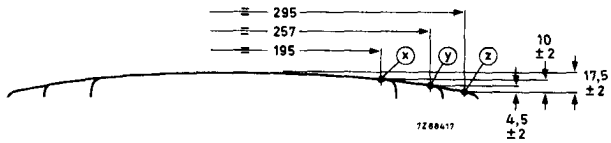

MECHANICAL DATA (continued)

Dimensions in mm

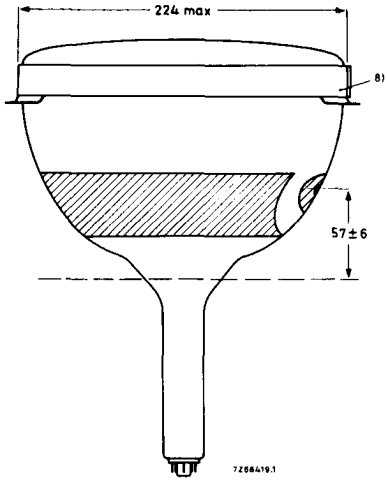

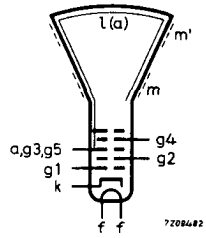

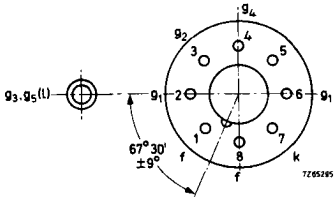

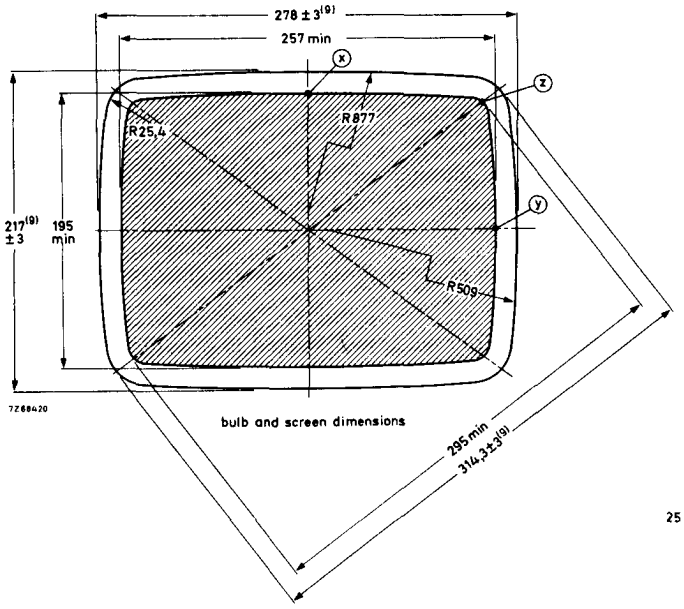

bulb and screen dimensions

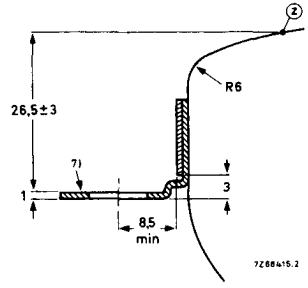

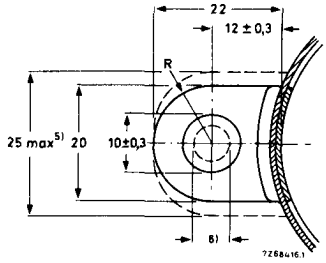

See "Notes to outline drawings".

MECHANICAL DATA (continued)

Mounting position : any	
Base	Neo eightar (B8H), IEC 67-I-31a
Cavity contact	CT8, IEC 67-III-2
Accessories	
Socket	2422 501 06001
Final accelerator contact connector	type 55563A

PICTURE CENTRING MAGNET

Field intensity perpendicular to the tube axis adjustable from 0 to 800 A/m (0 to 10 Oe). Adjustment of the centring magnet should not cause a general reduction in brightness or shading the raster.

NOTES TO OUTLINE DRAWINGS

1) The reference line is determined by the plane of the upper edge of the flange of the reference line gauge with the gauge resting on the cone.
2) The maximum dimension is determined by the reference line gauge.
3) This tube has a external conductive coating (m), which must be earthed. The capacitance of this coating to the final accelerator is used for smoothing the EHT. The tube marking and warning labels are on the side of the cone opposite the final accelerator contact, and this side should not be used for making contact to the conductive coating.
4) This area must be kept clean.
5) Minimum space to be reserved for mounting lugs.
6) The mounting screws in the cabinet must be situated within a circle with a diameter of 6 mm drawn around the true geometrical position (corners of a rectangle of 267,5 mm x 204,4 mm).
7) The maximum displacement of any lug, with respect to the plane through the other three lugs is 2 mm.
8) The metal rim-band must be earthed. For this purpose the band is provided with a tag.
9) The bulge of the spliceline seal may increase the indicated maximum values for envelope width, diagonal, and height by not more than 6,4 mm, but at any point around the seal the bulge will not protrude more than 3,2 mm beyond the envelope surface.

CAPACITANCES

Final accelerator to external conductive coating	$C_{g3,\ g5(\ell)}$/m	1200	pF
Final accelerator to metal band	$C_{g3,\ g5(\ell)}$/m	150	pF
Cathode to all other elements	C_k	5	pF
Control grid to all other elements	C_{g1}	7	pF

TYPICAL OPERATING CONDITIONS

Final accelerator voltage	$V_{g3,\ g5(\ell)}$	16	kV
Focusing electrode voltage	V_{g4}	0 to 400	V
First accelerator voltage	V_{g2}	600	V
Grid 1 voltage for extinction of focused raster	V_{g1}	-32 to -85	V

RESOLUTION

Resolution at screen centre measured with the shrinking raster method (non-interlaced raster), under typical operating conditions, and at a beam current of 50 μA: 900 lines

If necessary, the picture quality can be improved by using a beam centring magnet. This magnet, catalogue number 3322 142 11401, can be supplied on request.

LIMITING VALUES (Absolute max. rating system)

Final accelerator voltage	$V_{g3,\ g5(\ell)}$	max.	18	kV
		min.	10	kV
Focusing electrode voltage, positive	V_{g4}	max.	1000	V
negative	$-V_{g4}$	max.	500	V
First accelerator voltage	V_{g2}	max.	800	V
		min.	300	V
Grid voltage, negative	$-V_{g1}$	max.	150	V
positive	V_{g1}	max.	0	V
positive peak	V_{g1p}	max.	2	V
Cathode to heater voltage, positive	V_{kf}	max.	250	V
positive peak	V_{kfp}	max.	300	V
negative	$-V_{kf}$	max.	135	V [1]
negative peak	$-V_{kfp}$	max.	180	V

1) During a warm-up period not exceeding 15 s the heater may be 410 V negative with respect to the cathode.

REFERENCE LINE GAUGE
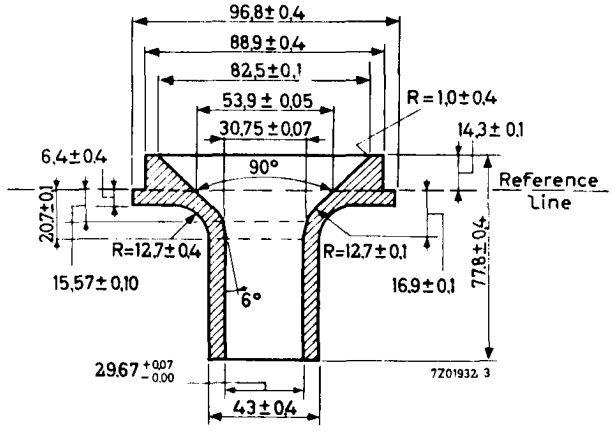
Dimensions in mm