MONITOR TUBE

The M31-130W is a 31 cm-diagonal rectangular television tube with metal-backed screen primarily intended for use as a monitor or display tube.

QUICK REFERENCE DATA			
Deflection angle		90 °	
Focusing	electrostatic		
Resolution		900	lines
Overall length	max.	310	mm

SCREEN

Metal-backed phosphor

Luminescence		white	
Light transmission of face glass	approx.	50	%
Useful diagonal	min.	295	mm
Useful width	min.	257	mm
Useful height	min.	195	mm

HEATING

Indirect by a.c. or d.c.; parallel supply

Heater voltage	V_f	6,3	V
Heater current	I_f	300	mA

FOCUSING electrostatic

For focusing voltage providing optimum focus at a beam current of 100 μA see under "Typical operating conditions".

DEFLECTION magnetic

Diagonal deflection angle 90 °

Deflection coil AT1071/03 is recommended.

MECHANICAL DATA

Dimensions in mm

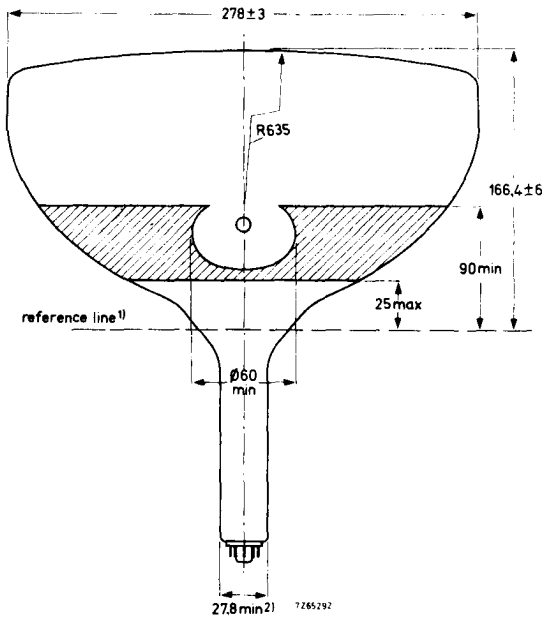

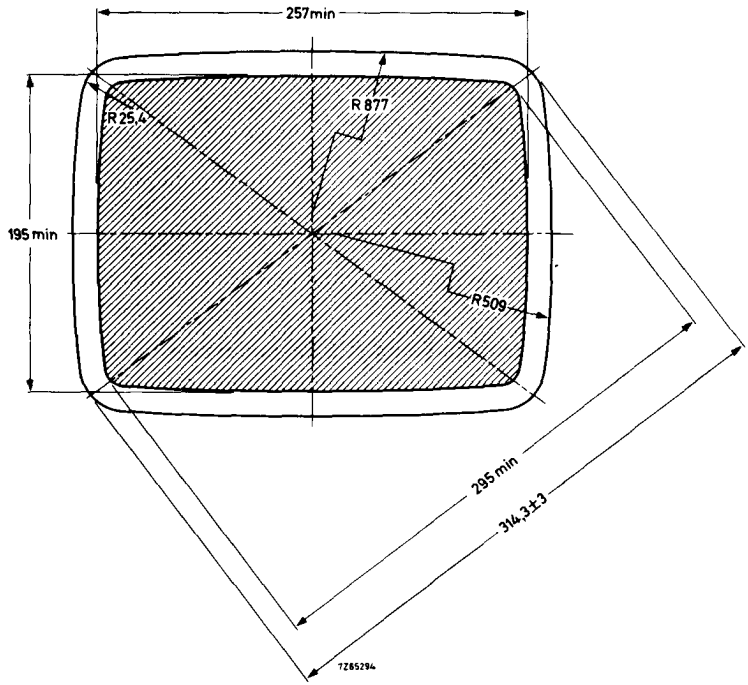

MECHANICAL DATA (continued)

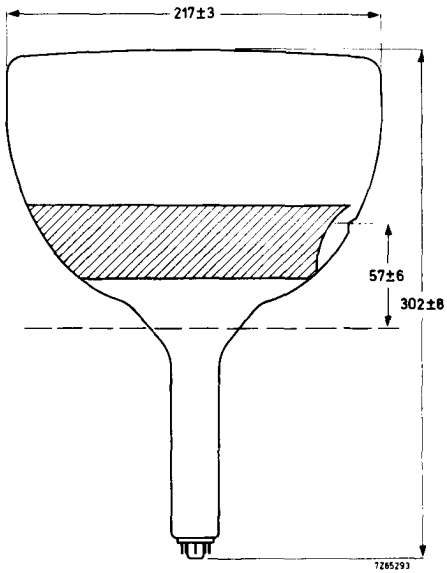

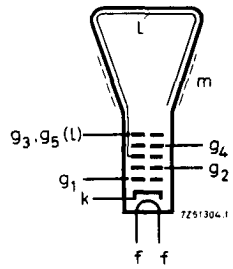

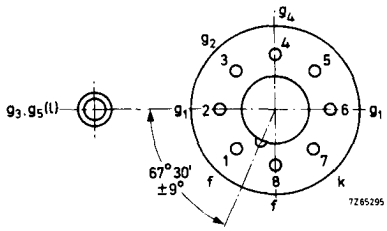

Mounting position: any, except vertical with the screen down and the axis of the tube making an angle of less than 20° with the vertical.

Base	Neo eightar (B8H), IEC67-I-31a
Cavity contact	CT8, IEC67-III-2
Accessories	
Socket	2422 501 06001
Final accelerator contact connector	type 55563A

CAPACITANCES

Final accelerator to external conductive coating	$C_{g3,\ g5(\ell)}/m$	1100	pF
Cathode to all other elements	C_k	5	pF
Control grid to all other elements	C_{g1}	7	pF

[1]) The reference line is determined by the plane of the upper edge of the flange of the reference line gauge with the gauge resting on the cone.

[2]) The maximum dimension is determined by the reference line gauge.

TYPICAL OPERATING CONDITIONS

Final accelerator voltage	$V_{g3,\,g5(\ell)}$	16	kV
Focusing electrode voltage	V_{g4}	0 to 400	V
First accelerator voltage	V_{g2}	600	V
Grid no. 1 voltage for extinction of focused raster	V_{g1}	−32 to −85	V

RESOLUTION

Resolution at screen centre measured with the shrinking raster method (non-interlaced raster), under typical operating conditions, and at a beam current of 50 μA: 900 lines
The resolution can be improved by the use of beam centring magnet, catalogue number 3322 142 11401, supplied on request.

LIMITING VALUES (Absolute max. rating system)

Final accelerator voltage	$V_{g3,\,g5(\ell)}$	max.	18	kV	
		min.	10	kV	
Focusing electrode voltage, positive	V_{g4}	max.	1000	V	
	$-V_{g4}$	max.	500	V	
First accelerator voltage	V_{g2}	max.	800	V	
		min.	300	V	
Grid no. 1 voltage, negative	$-V_{g1}$	max.	150	V	
positive	V_{g1}	max.	0	V	
positive peak	V_{g1p}	max.	2	V	
Cathode to heater voltage, positive	V_{kf}	max.	250	V	
positive peak	V_{kfp}	max.	300	V	1)
negative	$-V_{kf}$	max.	135	V	
negative peak	$-V_{kfp}$	max.	180	V	

REFERENCE LINE GAUGE

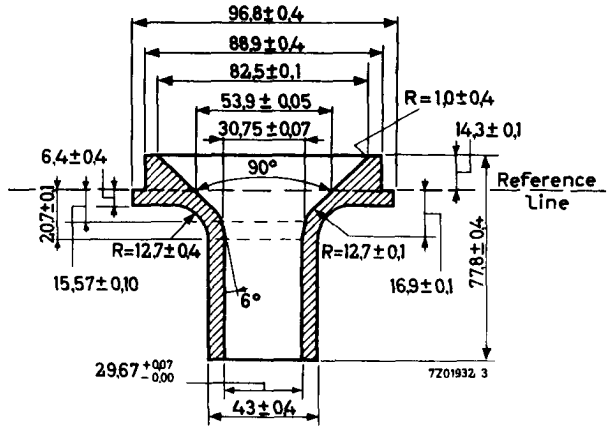

1) During a warm-up period not exceeding 15 s the heater may be 410 V negative with respect to the cathode.