VERY HIGH RESOLUTION FLAT CATHODE-RAY TUBE

- 17 cm diagonal rectangular flat face
- 70° deflection angle
- very high resolution
- quick heating cathode

QUICK REFERENCE DATA

Deflection angle, diagonal	70 °
Face diagonal	17 cm
Neck diameter	28 mm
Overall length	max. 269 mm
Screen dimensions	min. 124 mm x 93 mm
Resolution	approx 2500 TV lines 1800 lines (shrinking raster)

APPLICATION *

This tube has been designed for use in photographic applications where screen current is generally limited to a maximum of 20 μA. At these relatively low screen currents, the extremely good resolution together with the excellent screen quality, makes this tube ideal for use in photographic equipment.

* Application support is available on request.

ELECTRICAL DATA

Capacitances		
final accelerator to external conductive coating	$C_{g4(\ell)}/m$	310 pF
cathode to all other elements	C_k	2,8 pF
grid 1 to all other elements	C_{g1}	6 pF
Focusing method	electrostatic	
Deflection method	magnetic	
Deflection angle, diagonal	70°	
Heating	indirect by AC or DC	
heater voltage	V_f	6,3 V
heater current	I_f	240 mA
Heating time to attain 10% of the cathode current at equilibrium conditions	approx.	5 s

OPTICAL DATA

Screen	metal-backed phosphor
Phosphor type	WE *
fluorescent colour	white
persistence	medium short
Useful screen dimensions	
diagonal	min. 155 mm
horizontal axis	min. 124 mm
vertical axis	min. 93 mm
Light transmission of screen glass	approx. 92%

The M17-220WE has an improved screen blemish and uniformity specification, to meet the extreme requirements of photographic recording equipment.

* Other phosphors available to special order.

MECHANICAL DATA

Overall length	262 ± 7 mm
Neck diameter	min. 27,8 mm
Base	JEDEC B10-277
Final accelerator contact	cavity contact, CT8; IEC67-III-2
Net mass	approx. 0,8 kg

Mounting

The tube should not be mounted in a vertical position, screen downwards, such that its longitudinal axis makes an angle of less that 20° with the vertical. This is the only restriction on mounting.

Accessories

Final accelerator contact connector	55563A
Deflection coils*	Syntronic type deflection coils are highly recommended. e.g. 15330/1

Options

- customer designed suspension system
- implosion protection
- other phosphors

* The tube has internal magnetic correction for astigmatism. To avoid changing this correction, the coil must be at zero potential, before being moved on the tube neck.

MECHANICAL DATA

Dimensions in mm

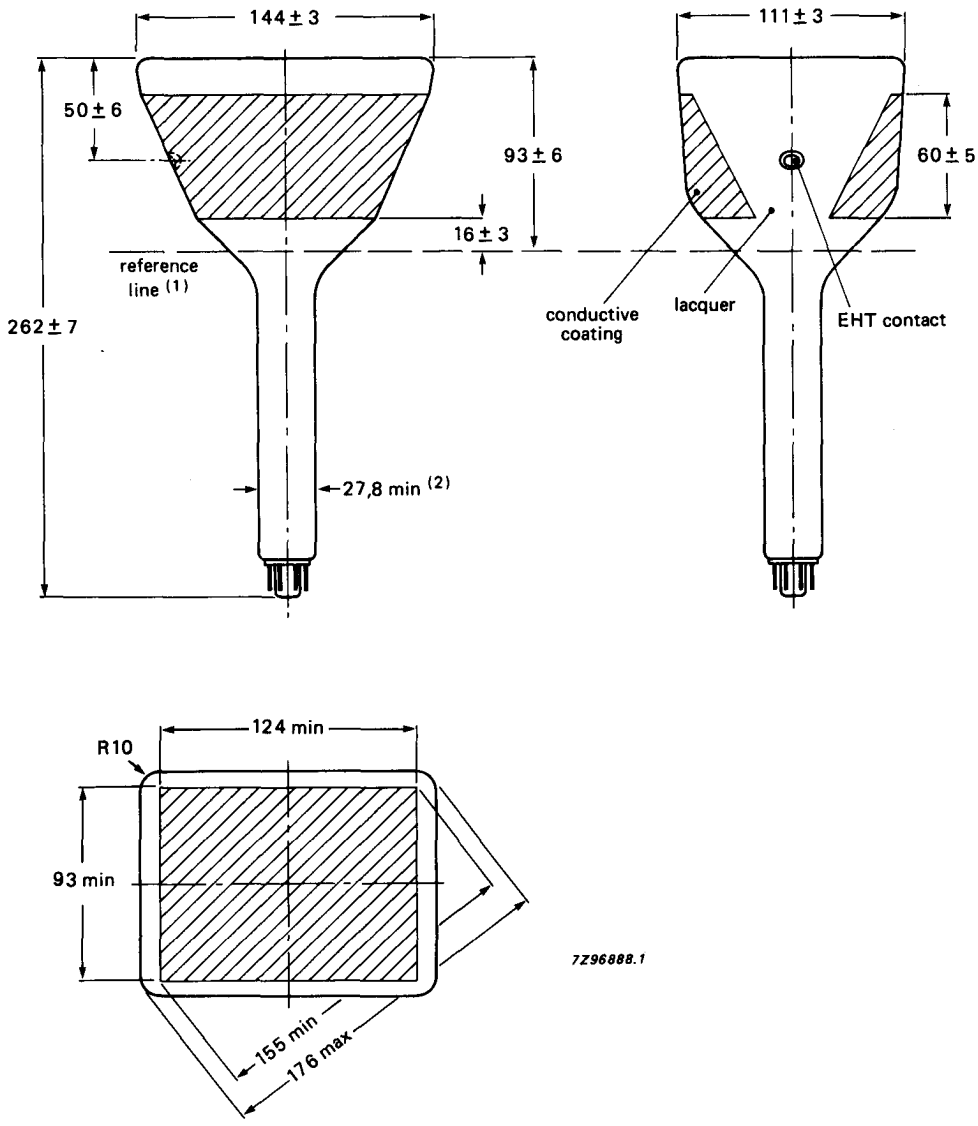

Fig. 1.

(1) Reference line, determined by the plane of the upper edge of the flange of the reference line gauge when the gauge is resting on the cone.
(2) The maximum dimension is determined by the reference line gauge.

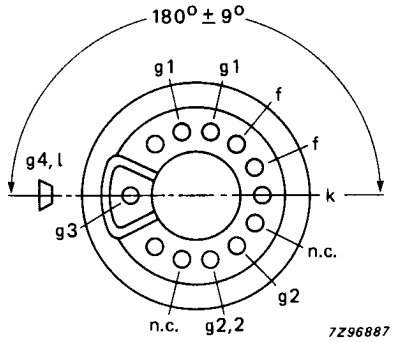

Fig. 2.

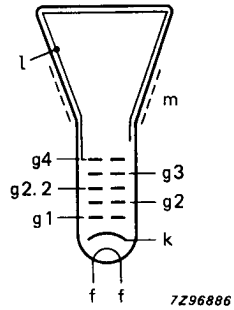

Fig. 3.

Reference line gauge

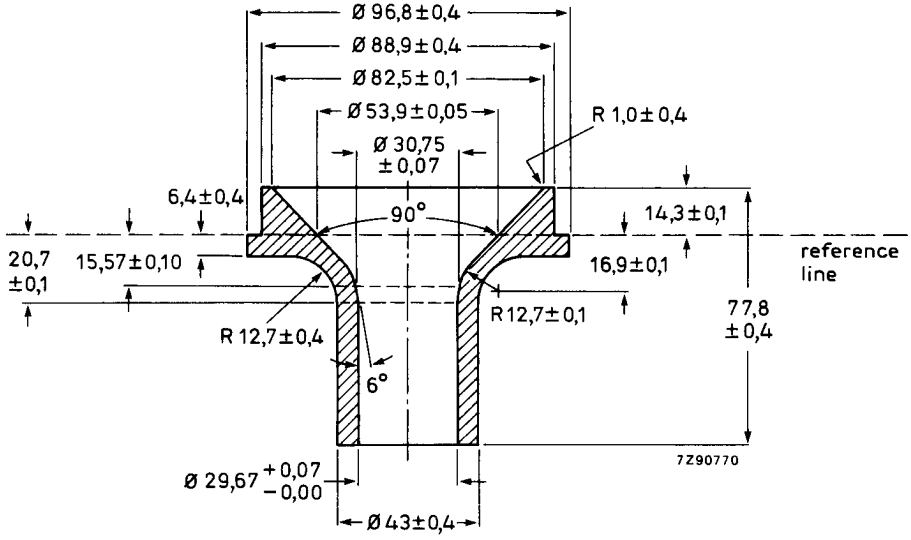

Fig. 4.

RECOMMENDED OPERATING CONDITIONS

Final accelerator voltage	$V_{g4(\ell)}$	15 kV
Focusing electrode voltage	V_{g3}	3,05 kV
Dynamic focusing	ΔV_{g3}	400 V
First accelerator voltage	V_{g2}	800 V
Second accelerator voltage	$V_{g2.2}$	3,05 kV
Cut-off voltage for visual extinction of focused spot	$-V_{g1}$	50 to 80 V

RESOLUTION

Resolution at screen centre, measured with shrinking raster method (non-interlaced raster)	
at $V_{g4(\ell)}$ = 15 kV; V_{g2} = 800 V; $V_{g2.2}$ = 3,05 kV	approx 2500 TV lines
I_ℓ = 10 μA; luminance = 200 cd/m^2 (see Fig. 6)	1800 lines (shrinking raster)

LIMITING VALUES

Final accelerator voltage	V_{g4}	max.	17 kV
		min.	13 kV
Focusing electrode voltage	V_{g3}	max.	3,2 kV
		min.	2,9 kV
First accelerator voltage	V_{g2}	max.	1,2 kV
		min.	0,6 kV
Second accelerator voltage	$V_{g2.2}$	max.	3,2 kV
		min.	2,0 kV
Screen current	$I_{g4(\ell)}$	max.	20 μA
Grid G2.2			
maximum interception of cathode current at screen current = 20 μA			50 %
Control grid voltage			
negative	$-V_{g1}$	max.	150 V
positive	V_{g1}	max.	0 V
positive peak	V_{g1p}	max.	2 V
Cathode to heater voltage			
positive	V_{kf}	max.	125 V
negative	$-V_{kf}$	max.	125 V

FLASHOVER PROTECTION

With the high voltage used with this tube internal flashovers may occur. These may destroy the cathode of the tube. Therefore it is necessary to provide protective circuits, using spark gaps.
The spark gaps must be connected as follows:

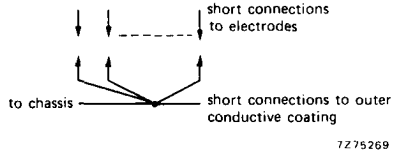

No other connections between the outer conductive coating and the chassis are permissible.

Fig. 5.

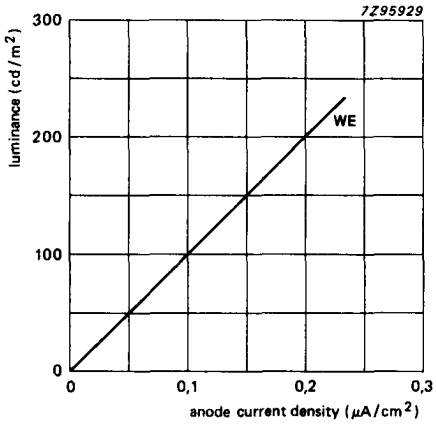

Luminance is measured with a photo-cell, the spectral response of which is identical to that of the human eye, on a 312-lines non-interlaced raster with screen dimensions 70 mm x 70 mm, frame frequency 50 Hz and V_{g4} = 15 kV.

Fig. 6 Luminance.

X-RADIATION LIMIT

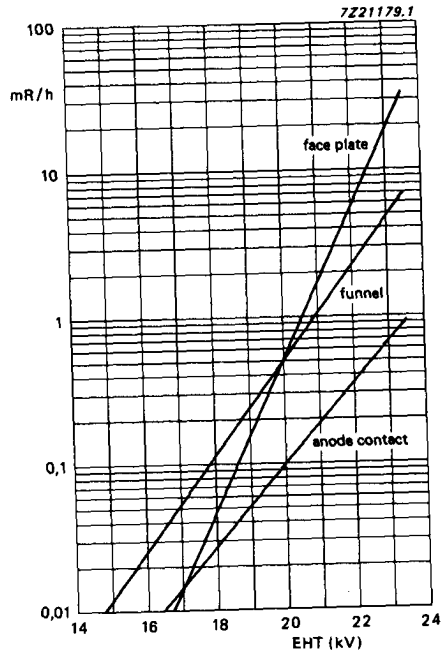

Fig. 7 X-radiation limit curves, at a constant anode current of 50 μA, measured in accordance with TEPAC164.

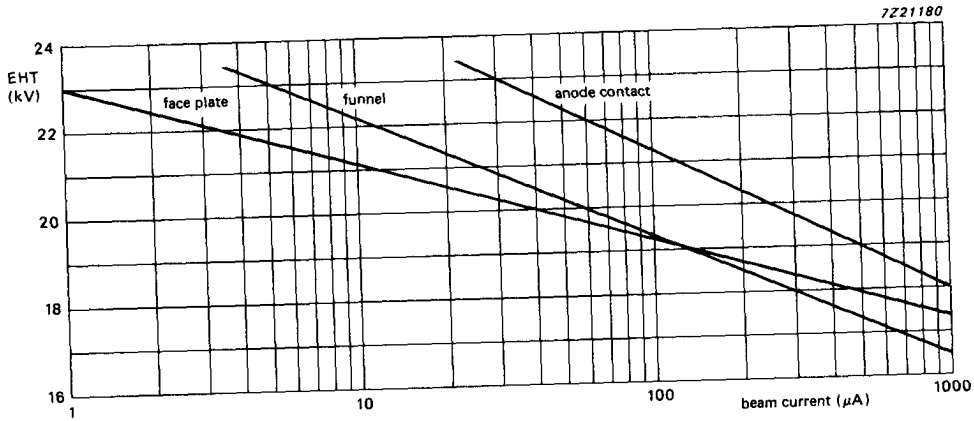

Fig. 8 0,5 mR/h isoexposure-rate limit curves, measured in accordance with TEPAC164.