MONITOR TUBES

- 17 cm diagonal rectangular flat face
- 70° deflection angle
- high resolution
- quick heating cathode
- M17-142WE: for use in precision monitors and as a viewfinder in television cameras
  M17-144WE: for use in photographic equipment (see Optical Data)

QUICK REFERENCE DATA

Deflection angle, diagonal	70 °
Face diagonal	17 cm
Neck diameter	28 mm
Overall length	max. 234 mm
Screen dimensions	min. 124 mm x 93 mm
Resolution	min. 1050 TV lines

ELECTRICAL DATA

Capacitances			
final accelerator to external conductive coating	$C_{g3,g5(\ell)/m}$	300	pF
cathode to all other elements	C_k	3,6	pF
grid 1 to all other elements	C_{g1}	7	pF
Focusing method	electrostatic		
Deflection method	magnetic*		
Deflection angle, diagonal	70°		
Heating	indirect by AC or DC **		
heater voltage	V_f	6,3	V
heater current	I_f	240	mA
Heating time to attain 10% of the cathode current at equilibrium conditions	approx.	5	s

OPTICAL DATA

Screen	metal-backed phosphor
Phosphor type	WE ▲
fluorescent colour	white
persistence	medium short
Useful screen dimensions	
diagonal	min. 155 mm
horizontal axis	min. 124 mm
vertical axis	min. 93 mm
Light transmission of screen	approx. 92%

Note: The M17-144WE has an improved screen blemish specification, to meet the extreme requirements of photographic recording equipment.

* To obtain the best tube performance, use either the AT1071/05 or the AT1071/07 deflection unit.
** Not to be connected in series with other tubes.
▲ Other phosphors available to special order.

MECHANICAL DATA (see also the figures on the next page)

Overall length	227 ± 7 mm
Neck diameter	min. 27,8 mm
Base	neo eightar, B8H; IEC67-I-31a
Final accelerator contact	cavity contact, CT8; IEC67-III-2
Net mass	approx. 0,7 kg

Mounting

The tube can be mounted in any position. It must not be supported by the socket and not by the base region alone.

Accessories

Final accelerator contact connector	55563A

MECHANICAL DATA Dimensions in mm

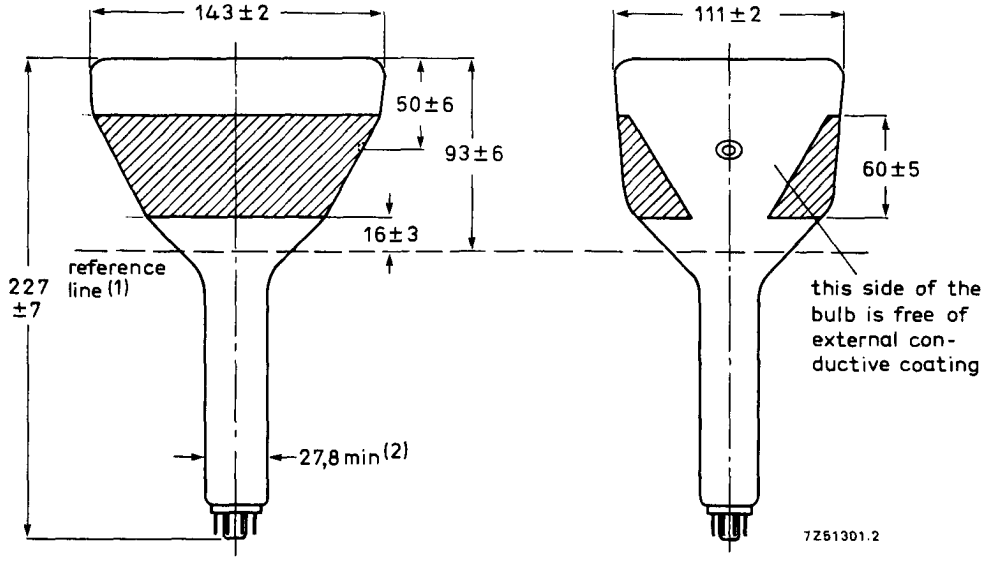

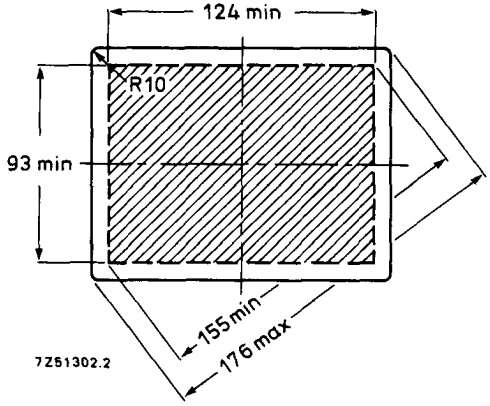

(1) Reference line, determined by the plane of the upper edge of the flange of the reference line gauge when the gauge is resting on the cone.
(2) The maximum dimension is determined by the reference line gauge.

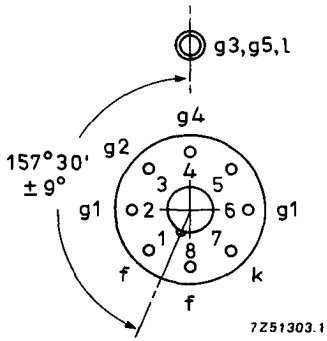

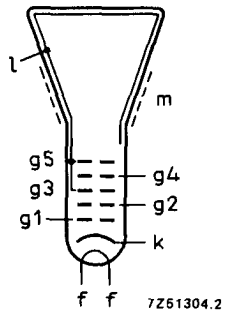

Reference line gauge

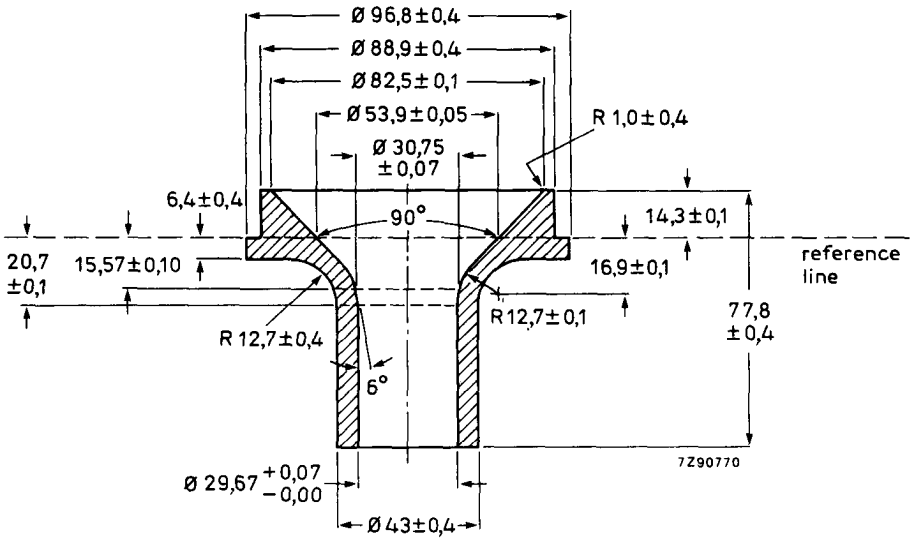

RECOMMENDED OPERATING CONDITIONS

Final accelerator voltage	$V_{g3,g5(\ell)}$	14	kV
Focusing electrode voltage	V_{g4}	0 to 400	V*
First accelerator voltage	V_{g2}	400	V
Cut-off voltage for visual extinction of focused spot	$-V_{g1}$	30 to 62	V

RESOLUTION

Resolution at screen centre, measured with beam centring magnet** at $V_{g3,g5(\ell)}$ = 14 kV, V_{g2} = 400 V, I_ℓ = 20 μA, luminance = 400 cd/m² ▲	min.	1050	TV lines

LIMITING VALUES

Final accelerator voltage	$V_{g3,g5(\ell)}$	max.	16	kV
		min.	12	kV
Focusing electrode voltage	V_{g4}	max.	1	kV
	$-V_{g4}$	max.	0,5	kV
First accelerator voltage	V_{g2}	max.	800	V
		min.	300	V
Control grid voltage				
negative	$-V_{g1}$	max.	150	V
positive	V_{g1}	max.	0	V
positive peak	V_{g1p}	max.	2	V
Cathode to heater voltage				
positive	V_{kf}	max.	125	V
negative	$-V_{kf}$	max.	125	V

* For optimum focus at a beam-current of 50 μA.

** Catalogue number 3322 142 11401; supplied with directions for use with each tube.

▲ Luminance is measured with a photocell, of which the spectral response curve is identical to that of the human eye, on a 312-lines raster with dimensions 70 mm x 70 mm.

X-RADIATION LIMIT

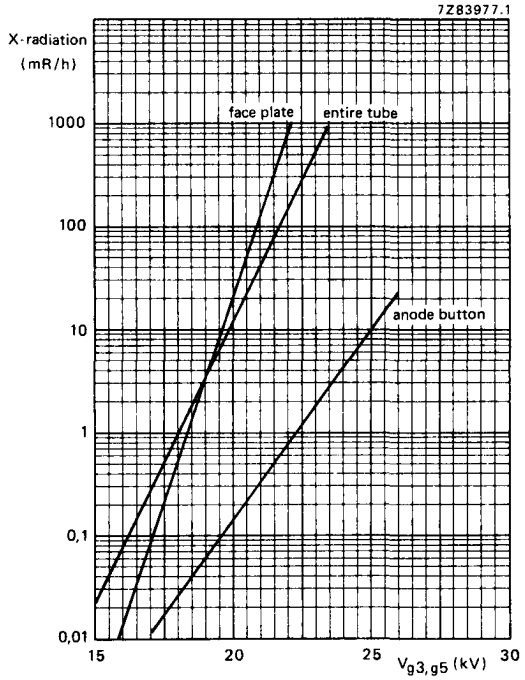

X-radiation limit curves, at a constant anode current of 250 μA, measured according to TEPAC103A.

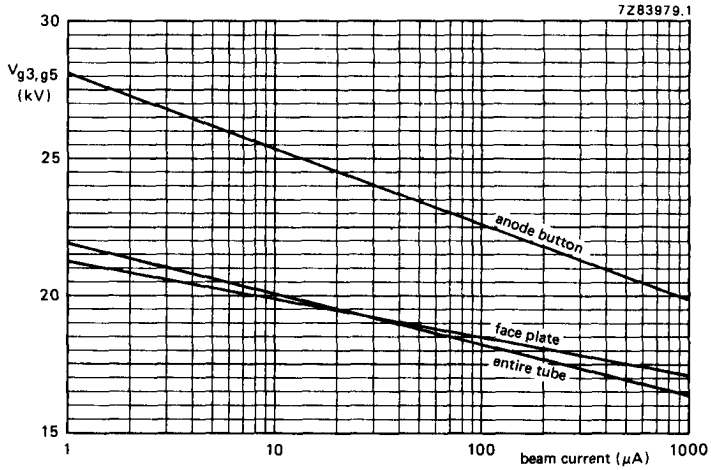

0,5 mR/h isoexposure-rate limit curves, measured according to TEPAC103A.

Product safety

X-ray shielding of the cone is advisable to give protection against possible danger of personal injury arising from prolonged exposure at close range to this tube when operated above 14 kV.

FLASHOVER PROTECTION

With the high voltage used with this tube internal flashovers may occur. These may destroy the cathode of the tube. Therefore it is necessary to provide protective circuits, using spark gaps. The spark gaps must be connected as follows:

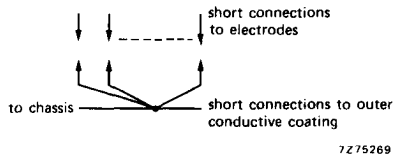

No other connections between the outer conductive coating and the chassis are permissible.