RADAR TRAVELLING-WAVE TUBE

LA9-3B

QUICK REFERENCE DATA		
Forward wave amplifier for general purpose use.		
Frequency range	7.0 to 11.5	GHz
Power output	10	mW
Gain	30	dB
Construction		Packaged
Output connections		Waveguide WR90

Services type: CV6087

To be read in conjunction with
GENERAL OPERATIONAL RECOMMENDATIONS - MICROWAVE DEVICES

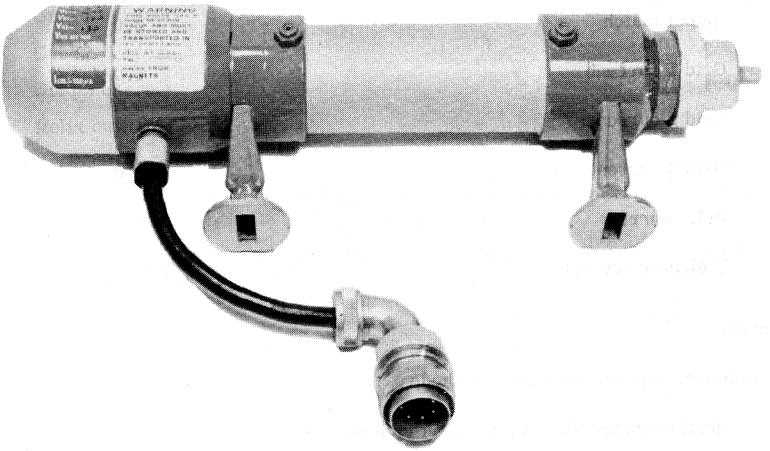

TYPICAL OPERATION

Operating conditions (electrode potentials measured with respect to cathode)

Heater voltage	6.3	V
Grid 1 voltage	-100	V
Grid 2 voltage	150	V
Grid 3 voltage	100	V
Helix voltage	1.3	kV
Collector voltage	1.4	kV
Operating frequency	9.0	GHz

Typical performance

Gain	30	dB
Power output (saturated)	10	mW
Power output (working)	50	μW
Noise factor	22	dB
Input match	2.0	
Output match	2.0	
Grid 1 current	1.0	μA
Grid 2 current	1.0	μA
Grid 3 current	1.0	μA
Helix current	15	μA
Collector current	550	μA

CATHODE

Indirectly heated, dispenser cathode

Heater voltage (d.c. or r.m.s.) (see note 1)	6.3	V
Heater current	0.5 to 0.7	A
Pre-heating time (minimum) (see note 2)	500	s

TEST CONDITIONS AND LIMITS

The travelling-wave tube is tested to comply with the following electrical conditions.

Test conditions

Heater voltage	6.3	V
Grid 1 voltage	-100	V
*Grid 2 voltage range	0 to 250	V
*Grid 3 voltage range	0 to 400	V
*Helix voltage range	1.15 to 1.45	kV
Collector voltage	helix voltage +100V	
Collector current	550	μA
Frequency range (see note 3)	7.0 to 11.5	GHz

*Specified on data sheet enclosed with tube.

Limits and characteristics

	Min.	Max.	
Gain	20	35	dB
Noise factor	-	24	dB
Power output	3.0	-	mW
Grid 1 current	-	10	μA
Grid 2 current	-	10	μA
Grid 3 current	-	10	μA
Helix current	-	50	μA
Attenuation (see note 4)			

RATINGS (ABSOLUTE MAXIMUM SYSTEM) (electrode potentials measured with respect to cathode)

These ratings cannot necessarily be used simultaneously and no individual rating should be exceeded.

	Min.	Max.	
Grid 1 voltage	-200	0	V
Grid 2 voltage	-	450	V
Grid 3 voltage	-	450	V
Helix voltage	-	1.6	kV
Helix current	-	100	μA
Collector voltage	-	1.7	kV
Collector current	-	600	μA

DESIGN RANGES FOR POWER SUPPLY (electrode potentials with respect to cathode)

Normal operation

	Min.	Max.	
Grid 1 voltage	-100	-70	V
Grid 1 current	-	10	μA
Grid 2 voltage	0	200	V
Grid 2 current	-	10	μA
Grid 3 voltage	0	250	V
Grid 3 current	-	10	μA
Helix voltage	1.15	1.45	kV
Helix current	-	60	μA
Collector voltage (see note 5)			
Collector current	-	550	μA

MOUNTING POSITION

Any. The barrel of the mount must be protected from strong magnetic fields such as from isolators and should be several centimetres from steel plates.

COOLING

Horizontally or vertically mounted — natural

AMBIENT TEMPERATURE RANGE

	Min.	Max.	
Operation to full specification	-10	+65	°C

PHYSICAL DATA

Packaged tube

	kg	lb
Weight	3.4	7.5
Weight in inner storage pack	3.9	8.5
Weight in transit carton (1 tube per carton)	58.5	129
	mm	in
Dimensions of inner storage pack	525 × 232 × 243	20.7 × 9.2 × 9.6
Dimensions of transit carton	900 × 560 × 600	35.4 × 22.3 × 23.5

NOTES

1. The absolute variation of heater voltage should be less than ±5%. When operated on d.c. the heater must be negative with respect to cathode.
2. The pre-heating time for a new tube must be at least 10 minutes.
3. The tube is tested at the centre and the extremes of the frequency range.
4. With electrode voltages not applied minimum attenuation is 40dB.
5. The collector voltage must be 100V greater than helix voltage. A stabilised supply is unnecessary.

OUTLINE DRAWING OF LA9-3B

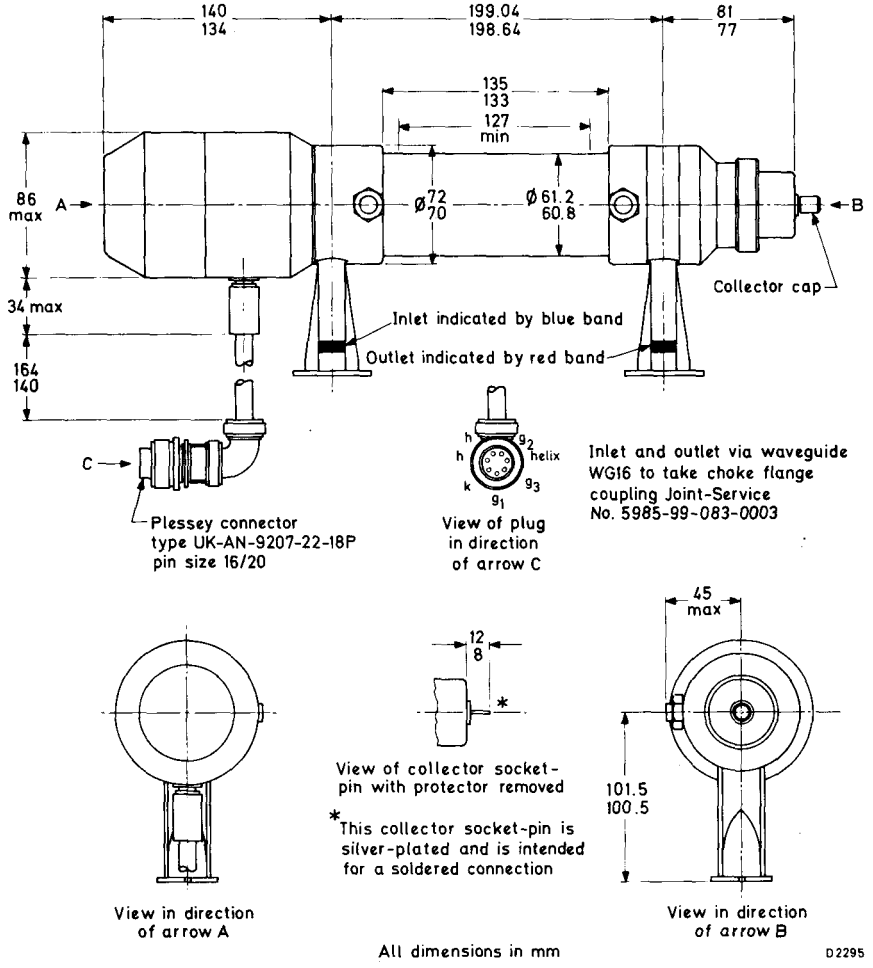

CONVERSION TABLE
(Rounded outwards)

mm	in
12/8	0.472/0.315
34 max.	1.34 max.
45 max.	1.77 max.
Ø61.2/60.8	Ø2.409/2.394
Ø72/70	Ø2.835/2.756
81/77	3.189/3.031
86 max.	3.39 max.
101.5/100.5	3.996/3.957
127 min.	5.00 min.
135/133	5.315/5.236
140/134	5.512/5.276
164/140	6.456/5.512
199.04/198.64	7.836/7.820

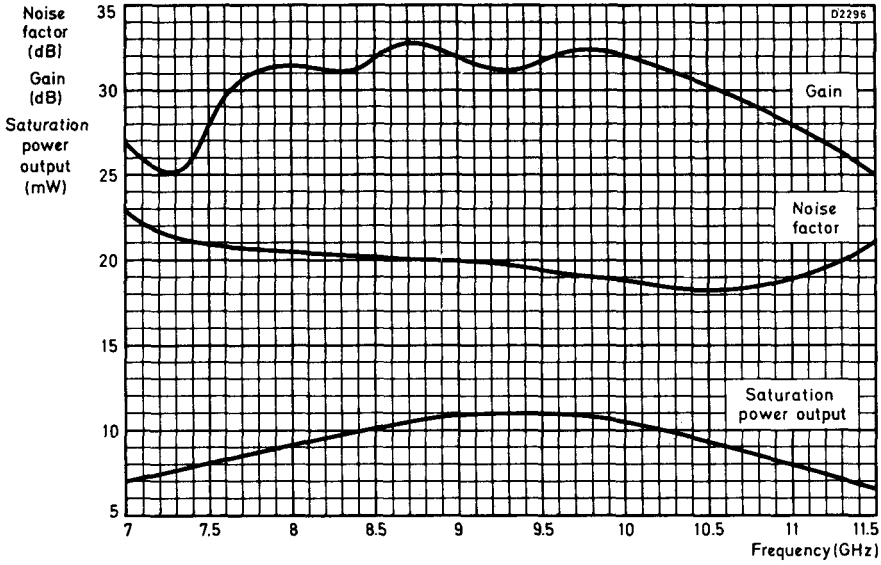

TYPICAL SATURATION POWER OUTPUT, GAIN AND NOISE FACTOR PLOTTED AGAINST FREQUENCY