TENTATIVE

CERAMIC HYDROGEN DIODE

DESCRIPTION:

THE KU-92 IS A CERAMIC ENVELOPE, INDIRECTLY HEATED, HYDROGEN FILLED DIODE FOR USE IN HIGH VOLTAGE RECTIFIER AND CLIPPER CIRCUITS. THIS TUBE, EQUIPPED WITH A HYDROGEN RESERVOIR WILL GIVE EXCELLENT RESULTS UNDER SEVERE ENVIRONMENTAL SERVICE.

THE INHERENT IMMUNITY FROM ELECTRICAL SURGE DAMAGE, AND RUGGED PHYSICAL CONSTRUCTION SUIT THIS DIODE TO COMPACT HIGH POWER RECTIFIERS AND MODULATORS.

ELECTRICAL DATA, GENERAL:	NOM.	MIN.	MAX.	
HEATER VOLTAGE	5.0	4.7	5.3	VOLTS AC
HEATER CURRENT (AT 5.0 VOLTS)		7.5	9.5	AMPERES
HEATER (NOTE 1)				
RESERVOIR VOLTAGE (NOTE 2)		4.7	5.3	VOLTS
RESERVOIR CURRENT AT 5.0 VOLTS		1.0	3.0	AMPERES
MINIMUM HEATING TIME			3	MINUTES

MECHANICAL DATA, GENERAL:

* MOUNTING POSITION (NOTE 3)		ANY
BASE		PER OUTLINE DWG.
COOLING (NOTE 4)		
NET WEIGHT	0.6	POUNDS
DIMENSIONS		PER OUTLINE

MAXIMUM RATINGS:	RECTIFIER	CLIPPER	BACK SWING DIODE	
PEAK INVERSE ANODE VOLTAGE	15.0	20.0	20.0	KILOVOLTS
PEAK ANODE CURRENT	3.0	300	300	AMPERES
AVERAGE ANODE CURRENT	600	200	200	MILLIAMPERES
R.M.S. ANODE CURRENT	-	6.0	6.0	AMPERES
ANODE VOLTAGE DROP	70	250	250	VOLTS
INITIAL FIRING VOLTAGE (NOTE 5)	100	-	-	VOLTS
RECURRENT FIRING VOLTAGE	60	-	-	VOLTS
AMBIENT TEMPERATURE	- 55 TO 125 DEGREES C			

* INDICATES CHANGE FROM DATA SHEET DATED 6-61

NOTE 1:

SEE OUTLINE DRAWING FOR CONNECTIONS.

NOTE 2:

THE OPTIMUM RESERVOIR VOLTAGE FOR RECTIFIER AND PULSE TRANSFORMER BACKSWING CLIPPER SERVICE IS 5.0 VOLTS. THIS MAY BE OBTAINED BY DIRECT CONNECTION TO THE CATHODE HEATER SUPPLY. FOR USE IN CERTAIN TYPES OF INVERSE CLIPPER SERVICE, A RESERVOIR VOLTAGE SOMEWHAT HIGHER OR LOWER MAY BE REQUIRED. (ERES 4.0 - 6.0 VOLTS)

NOTE 3:

* VERTICAL POSITION RECOMMENDED BUT NOT REQUIRED.

NOTE 4:

AIR BLAST COOLING (5 CFM) IS RECOMMENDED ABOUT THE BASE AND ANODE FOR OPERATION IN HIGH AMBIENT TEMPERATURE.

NOTE 5:

THE ROOT MEAN SQUARE ANODE CURRENT SHALL BE COMPUTED AS THE SQUARE ROOT OF THE PRODUCT OF PEAK AND THE AVERAGE CURRENT.

ADDITIONAL INFORMATION FOR SPECIFIC APPLICATIONS CAN BE OBTAINED FROM THE

ELECTRON TUBE APPLICATIONS SECTION
ITT COMPONENTS DIVISION
POST OFFICE BOX 412
CLIFTON, NEW JERSEY

* INDICATES CHANGE FROM DATA SHEET DATED 6-61

OUTLINE
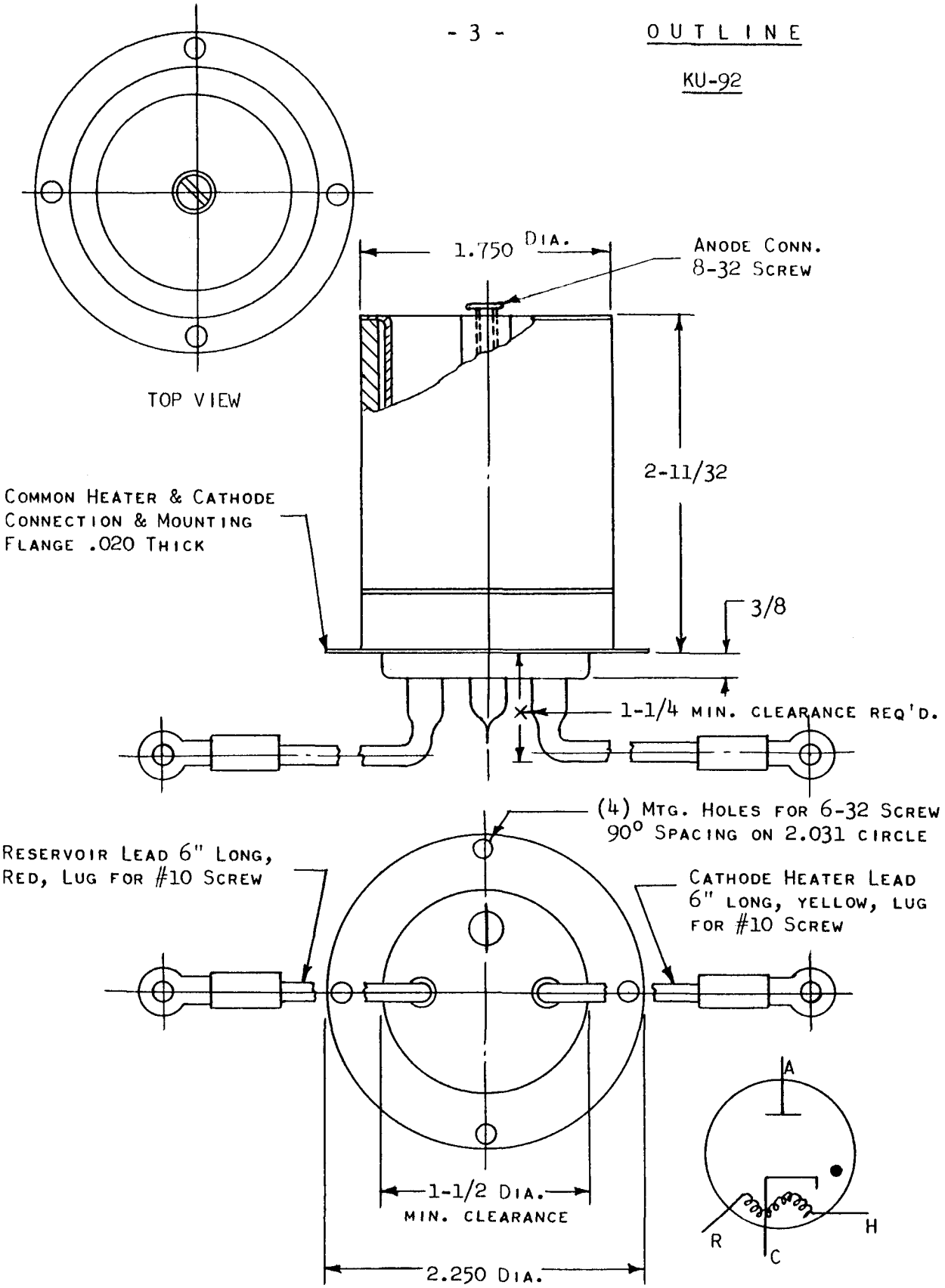
KU-92