ISTOK TECHNICAL DATA

ISTOK IMG-915-100KA Industrial Magnetron

The ISTOK™ IMG-915-100KA Industrial Magnetron is a 915 MHz fixed-tuned, electromagnet-focused 100 kW CW magnetron. It features ceramic-metal construction, liquid and air cooling, and very rugged construction for industrial applications.

The IMG-915-100KA is one of the few 100kW 915MHz magnetrons with a completely new design for conservative 100kW operation. A significant feature of this design is the RF output coupling structure. It is the only industrial magnetron available with direct conduction cooling through the vacuum envelope to the air cooling stream. The unique design provides exceptional cooling for handling 100kW RF power output conservatively.

Solenoids and wave guide transitions/launchers manufactured in the West for 60 and 75 kW magnetrons are plug compatible. This magnetron is designed for an industrial environment. It meets all electrical performance criteria under the temperature and shock/vibration conditions encountered in industrial applications.

The ISTOK IMG-915-100KA magnetron is manufactured in Fryazino, Russia, near Moscow. The strict manufacturing and quality control procedures for Russian military products are enforced throughout the Fryazino plant for all products.

General Characteristics

Electrical (Magnetron)		
Center Frequency	*915 ± 5*	*MHz*
RF Output (Nominal)	*100*	*kW*
Filament		
Nominal Voltage	*14.5*	*Vac*
Nominal Current at 14.5 Volts	*115*	*A*
Electrical (Solenoid)		
Resistance	*12*	*Ω*
Current (max)	*7.0*	*A*
Mechanical (Magnetron)		
Cooling	*Air and Liquid*	
Anode Cooling, liquid	*11 gal/min (40 l/min)*	
Cathode Cooling, air	*9 CFM (1/4 m³/min)*	
Dome Cooling, air	*35 CFM (1m³/min)*	
Operating Position	*Vertical, Dome Down or Up*	
Maximum Dimensions		
Length	*440 ± 2 mm*	
Diameter	*126 mm*	
Weight	*6.5 kg (14.3 lbs)*	
RF Output:	*Magnetron Antenna (Dome) to WR-975 Transition*	
Shock	*5*	*G*
Vibration	*10 - 80*	*Hz*
Ambient Operating Temperatures		
Maximum	*+70˚*	*C*
Minimum	*-55˚*	*C*
Humidity at 40˚ C	*98*	*%*

Istok Outline Drawing

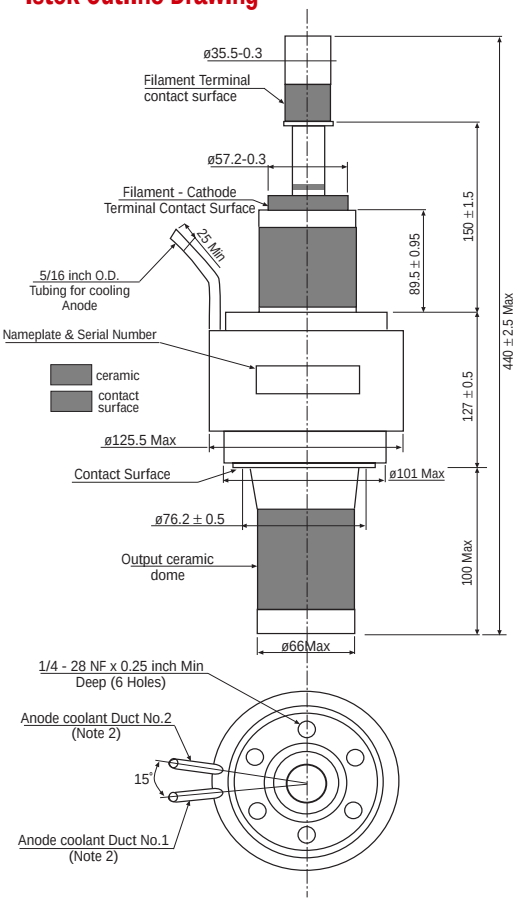

Notes:

1. Dimensions in millimeters.
2. Recommended direction of anode coolant flow: Duct No.2 is IN and Duct No.1 is OUT when tube is operated with output ceramic dome DOWN. With output ceramic dome UP, the flow should be reversed.
3. Magnetron may be delivered with customer specified 37˚ or 45˚ flared fittings on cooling lines.
4. RF Gasket and pole piece supplied with each magnetron.

ISTOK MICROWAVE

Headquarters:
ISTOK Microwave Products
8200 South Memorial Parkway
Huntsville, AL 35802
USA
Phone: 256 882 1344
Fax: 256 880 8077

Marketing & Engineering:
ISTOK Microwave Products
3000 Alpine Road
Portola Valley, CA 94028
USA
Phone: 650 233 0429
Fax: 650 233 0439

www.istok.com

3/99

ISTOK IMG-915-100KA
Industrial Magnetron

Mechanical (Solenoid)		
Cooling	*Liquid*	
Maximum Dimensions:		
Height	*172*	*mm*
Outer Diameter	*325*	*mm*
Weight	*50 kg*	*(110 lbs)*
Maximum Ratings, CW Oscillator		
Anode Voltage	*25*	*kV*
Anode Current	*7.0*	*A*
*Load VSWR***	*1.5:1*	*Max*
Typical Operation * 915 MHz		
Filament Current	*78*	*A*
Anode Voltage	*19.8*	*kV*
Anode Current	*6.1*	*A*
*Solenoid Current****	*5.0*	*A*
RF Output	*102*	*kW*
Efficiency	*84*	*%*

** Each IMG-915-100KA is delivered with a performance certificate including recommended operating data.*

***Anode voltage to be removed in 10 milliseconds or less for any fault.*

****Proper on off sequencing of solenoid current required*
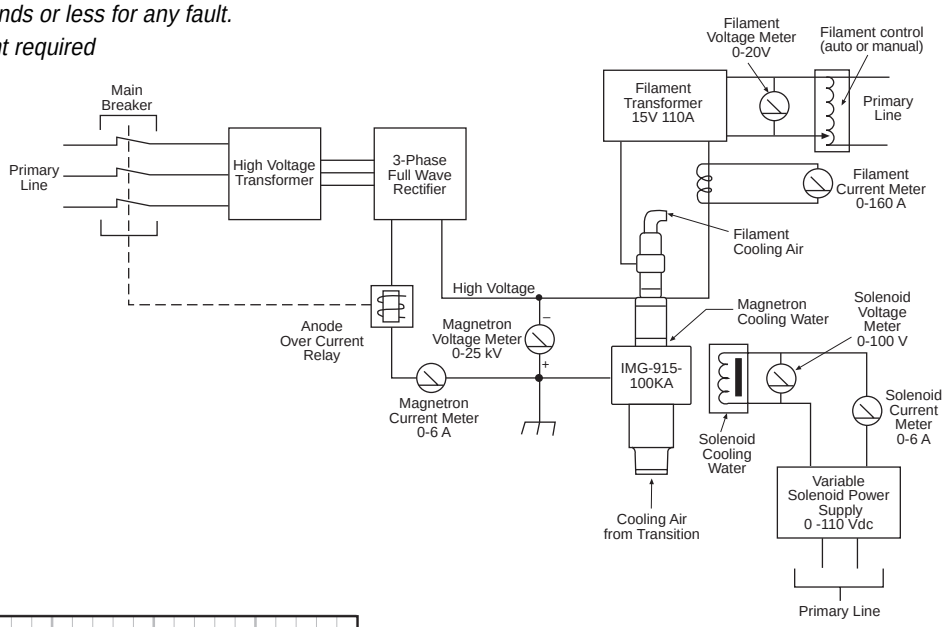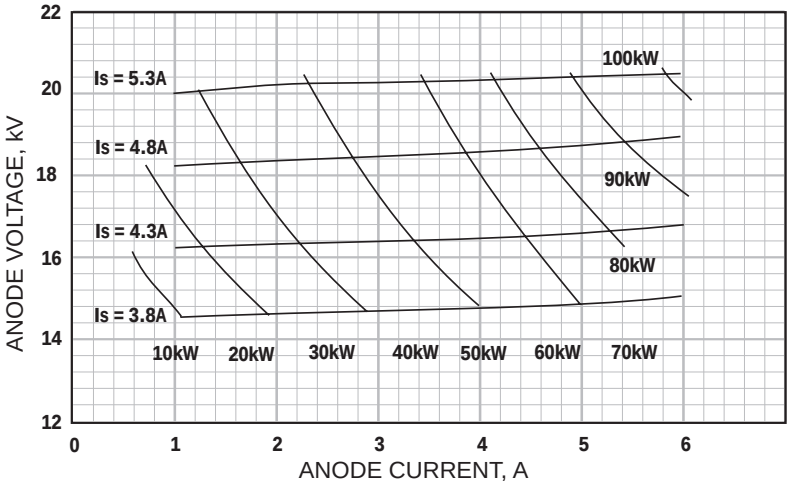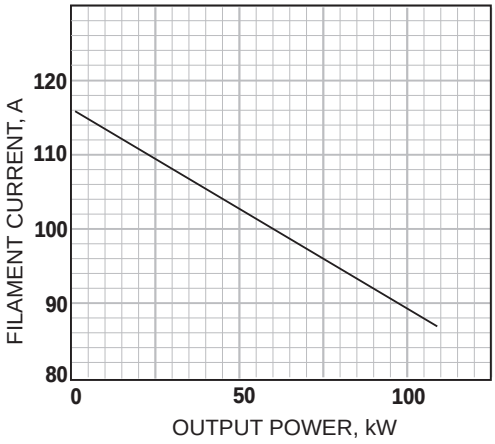
Application Drawing