GAMMATRON

11-36

Engineering Data Sheet
HK-354-1
(Revised)

GAMMATRON

TYPE HK-354

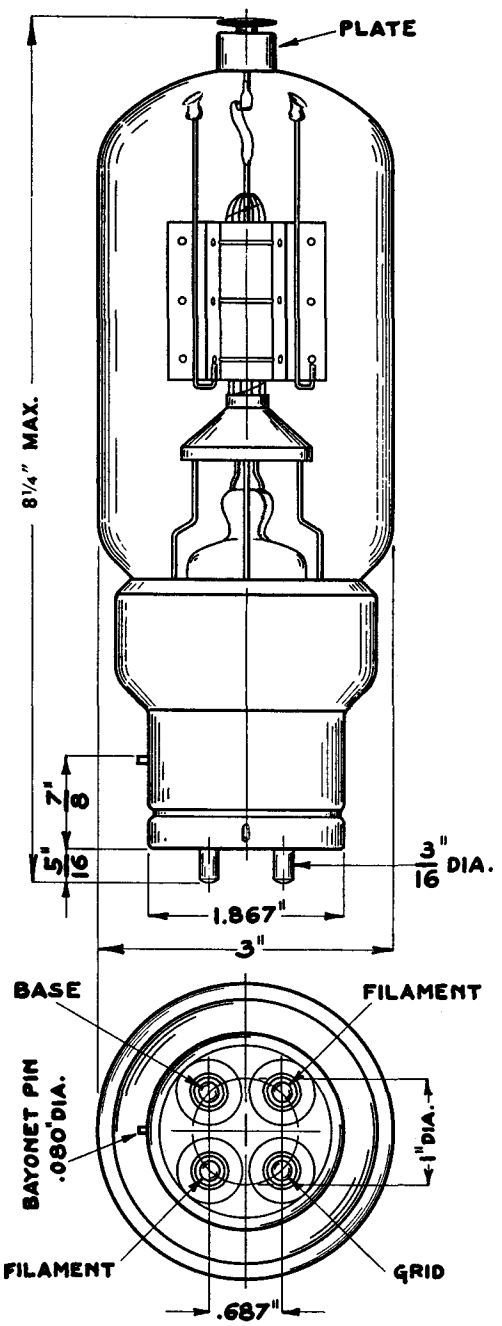

BOTTOM VIEW OF BASE.

PHYSICAL DATA

Plate	Cylindrical Tantalum
Grid	Braced Vertical Bar Tantalum
Filament	Thoriated Tungsten
Blank	Nonex Glass
Base	Standard Fifty Watt
Base Insulator	Ceramic
Net Weight	6½ Ounces
Shipping Weight	4 Pounds
Maximum Height	8¼ Inches
Maximum Diameter	3 Inches

ELECTRICAL DATA

Filament Voltage	5.0 Volts
Filament Current	10 Amps.
Normal Plate Dissipation	150 Watts
Maximum Average Plate Current	0.3 Amps.
Maximum Plate Voltage	4000 Volts
Maximum Average Grid Current	0.05 Amps.
Average Plate Impedance	2800 Ohms.
Average Amplification Constant	14.
Grid-Plate Capacitance	4. mmfd.
Grid-Filament Capacitance	9. mmfd.
Plate-Filament Capacitance	0.4 mmfd.

HEINTZ AND KAUFMAN LTD
SOUTH SAN FRANCISCO CALIFORNIA U. S. A.

GAMMATRONS HAVE TANTALUM PLATES and GRIDS!

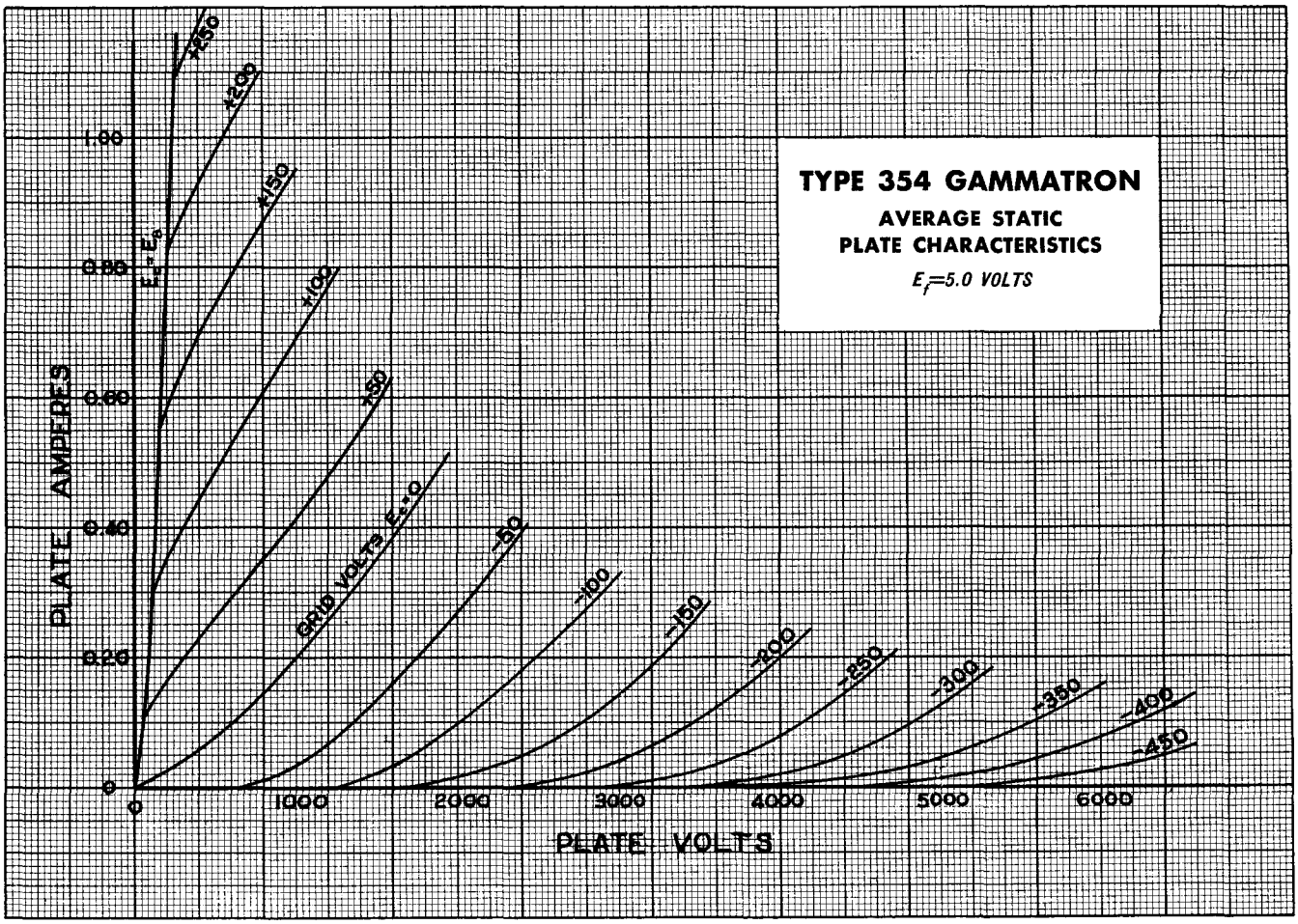
TYPE 354 GAMMATRON
AVERAGE STATIC
PLATE CHARACTERISTICS
E_f=5.0 VOLTS
PLATE AMPERES
PLATE VOLTS
GRID VOLTS E_c=0
$E_c = E_o$
+250
+200
+150
+100
+50
-50
-100
-150
-200
-250
-300
-350
-400
-450
1.00
0.80
0.60
0.40
0.20
0
1000
2000
3000
4000
5000
6000

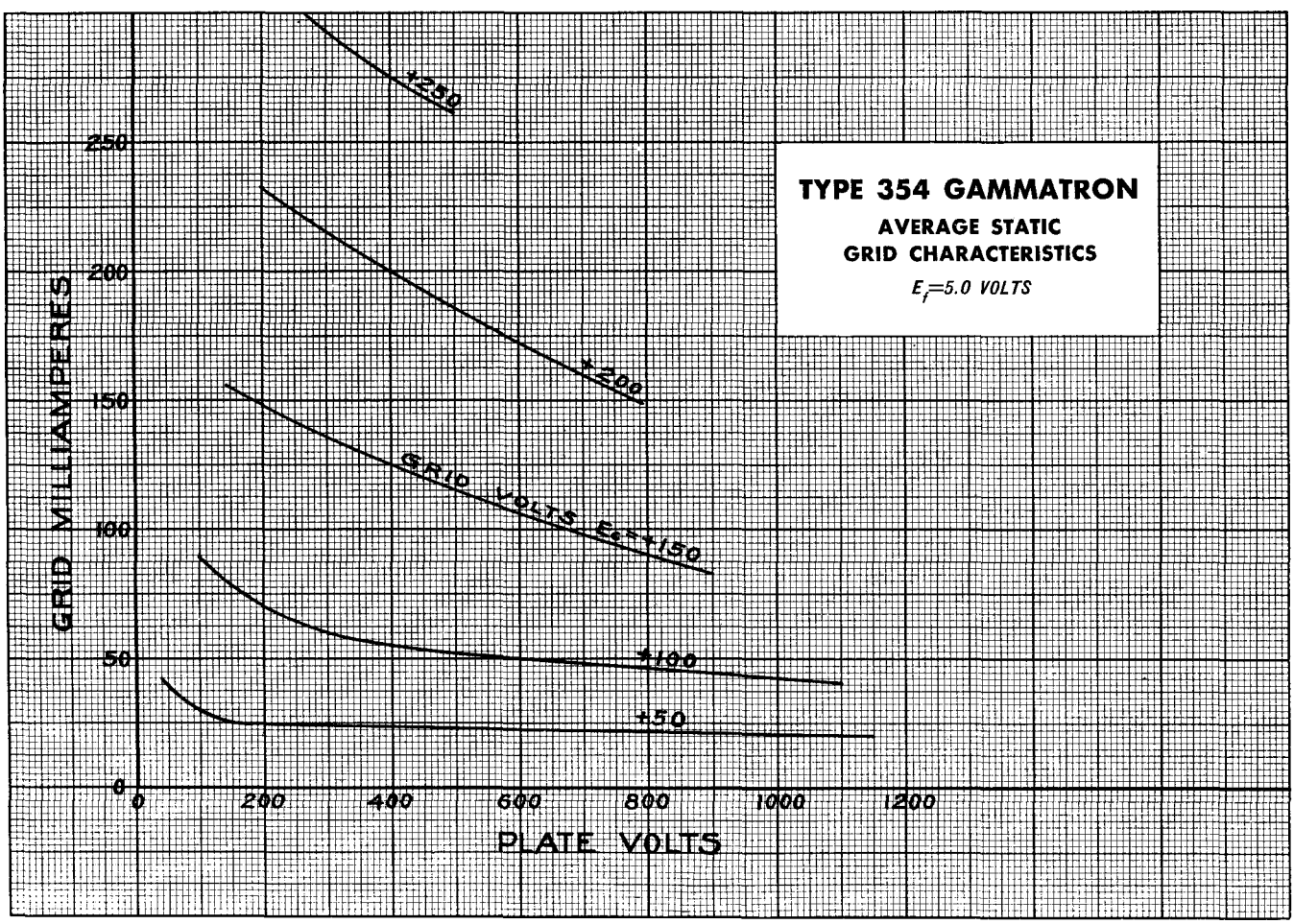
TYPE 354 GAMMATRON
AVERAGE STATIC
GRID CHARACTERISTICS
E_f=5.0 VOLTS
GRID MILLIAMPERES
PLATE VOLTS
GRID VOLTS E_c=+150
+250
+200
+100
+50
250
200
150
100
50
0
200
400
600
800
1000
1200

TYPE HK-354

APPLICATION AS A RADIO FREQUENCY AMPLIFIER

RADIO FREQUENCY AMPLIFIER – CLASS "C" (TELEGRAPHY)

(See Page 154-3)

The Type HK-354 GAMMATRON may be used as a Class C radio frequency amplifier with exceptionally good results. High mutual conductance, low internal capacitance, and the ability to stand high plate voltages make it possible to operate the Type HK-354 GAMMATRON at high efficiencies with low power excitation.

A Class C amplifier operates at a bias greater than cut off. The plate current flows in pulses less than one-half cycle during the period of positive grid swing when the plate impedance is low. The shorter the duration of the plate current pulse the higher the efficiency becomes, but the power output becomes less. High efficiency requires a large bias with a resultant increase in excitation power. Normal operation results in a compromise between the factors of power output, efficiency and excitation power. Table VI gives the operating data at the point of best compromise for various plate voltages.

The amount of excitation power required is governed by the output power desired and the operating efficiency. The Type HK-354 GAMMATRON is unusually easy to drive as may be seen by examination of the operating data. Using less driving power will merely reduce the output power and lower the efficiency slightly.

Grid leak bias may be used, but it is wise to provide enough fixed bias in addition to prevent the tube from becoming injured in the event of an excitation failure. The amount of protective fixed bias required is small, and it is well worth the insurance that it provides against tube injury. Its importance cannot be over-emphasized when plate potentials in excess of 1000 volts are used. The resultant bias is the fixed bias plus the product of the grid leak resistance multiplied by the rectified D.C. current. The correct value of the grid leak resistor (usually between 5,000 and 20,000 ohms) is readily determined by experiment. It should never be necessary to run the grid current above 50 milliamperes in order to properly excite a Type HK-354 GAMMATRON.

The output can be estimated with reasonable accuracy as the difference between input power and actual plate dissipation, bearing in mind that 75 watts plate dissipation causes a perceptible plate glow, 100 watts a dull red, and 150 watts a medium red. Actual efficiency is the ratio of output power to input power. In order to obtain relatively high efficiencies it is essential to use a tank circuit of low loss and a high L/C ratio.

Table I shown below, has been computed for an average tube, and individual tubes may vary somewhat from these values. This data applies only to operation at frequencies below 15 megacycles. When operating at ultra high frequencies it will be necessary to reduce these ratings. Limiting factors become plate, grid and glass bulb temperatures, and R. F. grid and plate current.

For details of design and adjustment of a Class C amplifier refer to current radio magazines.

CLASS "C" (TELEPHONY)

For Class C amplifier radio telephone operation it is not advisable to work the Type HK-354 GAMMATRON as hard, because it is necessary to provide for the peak output. For high-quality phone transmission the importance of adequate shielding and complete neutralization cannot be over-stressed. Link coupling between the buffer and amplifier is highly recommended.

The conditions for bias, maximum rating, and adjustment are about the same as in the case above. They may be determined by inspection of Table I.

RADIO FREQUENCY AMPLIFIER—CLASS "C" (SINGLE TUBE)

TABLE I

Plate Supply Volts	Plate Milli amperes	Grid Bias Volts	Grid Milli-amperes	Effective Excitation Volts	Driving Power Watts	Power Input Watts	Load Resistance Ohms	Power Output Watts	Plate Loss Watts	Plate Efficiency Per Cent
1500	250	–300	50	390	28	375	2800	270	105	72
2000	255	–400	50	466	32	510	3900	388	122	76
2500	255	–475	50	526	36	638	5000	504	134	79
3000[1]	255	–550	50	582	40	765	5900	628	137	82
3500	255	–625	50	642	43	890	7000	740	150	83
4000[2]	245	–700	48	700	46	980	8200	840	140	84

[1]Maximum rated plate voltage for modulated amplifier.
[2]Maximum rated plate voltage for c.w. telegraph.

GAMMATRONS HAVE TANTALUM PLATES and GRIDS!

Engineering Data Sheet
HK-354-4
(Revised)

RADIO FREQUENCY AMPLIFIER ---CLASS "B" LINEAR

The efficiency of a Class "B" amplifier is about one-half of a Class C amplifier and consequently its power output is much less. However, a Class B amplifier is attractive because it is a linear amplifier —the output signal is directly proportional to the input signal. It is possible then to modulate at low power requiring a small inexpensive modulation system, and amplify the modulated carrier. Another convenient method is to use grid modulation requiring only a few watts of audio power. The load impedance in a radio frequency amplifier is a resonant circuit, hence either a single tube or two tubes in push-pull may be employed. The **Type HK-354 GAMMATRON** performs excellently in Class B circuits.

Since the power required at peak modulation (100% modulation) is four times the carrier power, the tube must be operated at about one-fourth full power output and about one-half normal efficiency.

To obtain satisfactory operation of a Class B circuit, consistent with good output and low distortion, careful adjustment is required. First, the neutralization must be complete. With a high load impedance (loose coupling to the load) and bias adjusted to cut off, increase the excitation, fully modulated, until a grid meter indicates current is being taken by the grid (about 10 milliamperes). Then with the carrier unmodulated decrease the load impedance (increase the load coupling) until a maximum power output is obtained or until the plate loss becomes the rated value.

The grid modulated amplifier closely resembles a Class B amplifier, and its power outputs are similar. The adjustment is somewhat critical, however, but with proper adjustment good performance can be expected.

RADIO FREQUENCY AMPLIFIER CLASS "B"---CLASS "B" CARRIER WITH 100% MODULATION

TABLE II (SINGLE TUBE)

Plate Supply Volts	No-signal[1] Plate Milliamps	Plate Current Milliamps	Grid Bias Volts	Carrier Excitation Peak Volts	Peak Driving[2] Power Watts	Load Resistance Ohms	Carrier Output Watts	Plate Loss Watts	Plate Efficiency Per Cent
1000	20	58	– 60	85	8	5000	20	38	35
1500	30	81	– 95	110	10	5000	39	83	32
2000	50	97	–125	125	10	5000	60	134	31
2500	40	88	–165	140	10	7500	72	148	33
3000	33	78	–205	158	10	11000	82	153	35

Arithmetic sum of 2nd, 3rd, and 4th harmonics of molulated wave are not greater than 3.5% at 100% modulation, and under 2.5% att 75% modulation.

[1]Lower no-signal plate currents will increase distortion.

[2]At crest of audio cycle with 100% modulation.

RADIO FREQUENCY AMPLIFIER---GRID MODULATED

The audio system required for grid modulating the **Type HK-354 GAMMATRON** is very economical, the audio power required being negligible.

The audio power required is of the order of seven to ten watts. The radio frequency power available should be fifteen to twenty watts, assuming that the r.f. input circuit is loaded using non-inductive resistor absorbing one-half to two-thirds of the excitation power. This circuit loading assists in securing the required regulation for high quality.

Referring to the above table one should use 1.5 to 2.0 times the grid bias given for Class B linear operation. Load resistance is practically the same and carrier output almost as high as that listed above in Table II.

To improve the linearity and efficiency of a grid modulated amplifier a cathode resistor is sometimes used in combination with fixed bias. Methods of this order have been discussed in various radio publications and the reader is referred to the same.

GAMMATRONS HAVE TANTALUM PLATES and GRIDS!

TYPE HK-354

APPLICATIONS AS AN AUDIO AMPLIFIER

Audio Amplifier—Class "A"

The Type HK-354 GAMMATRON is an excellent power audio amplifier since it has a low plate resistance and will stand a high plate potential. At the same time it has a relatively high amplification factor thus requiring a small bias, and only a small signal voltage need be applied to the grid to develop full power output.

Under ordinary circumstances the optimum load resistance of a Class A triode power amplifier is equal to twice the dynamic plate resistance. This is also true of larger power tubes as long as the plate dissipation does not become a limiting factor. At plate potentials over 1500 volts the HK-354 GAMMATRON Class A operation is limited by plate dissipation. Hence, at these values it is necessary to adjust the grid bias to limit the plate dissipation to 150 watts, and use a higher load resistance. The plate dissipation is the D.C. plate voltage multiplied by the D.C. plate current with no audio signal input. Since individual tubes will vary somewhat as to amplification factor, the controlling element in adjusting an HK-354 GAMMATRON as a Class A audio amplifier is the plate current. Always adjust the plate current to the value indicated in the tables below, using the bias required for that adjustment. There is little advantage in employing plate potentials of more than 2500 volts. Actual plate dissipation may be estimated from the plate glow, 75 watts giving just a perceptible glow, 100 watts a dull red, and 150 watts a medium red.

Below is shown the typical operating data for the HK-354 GAMMATRON. The data is divided into three tables for convenience. Table III gives the performance limiting the second harmonic distortion to five per cent. Table IV gives the performance limiting the second harmonic distortion to ten per cent. Table V gives the performance for two tubes operating in push-pull. All quantities in Table V refer to two tubes. It will be noted that the output power in this connection is higher than two single tubes. Moreover, the distortion is less because of the cancellation of second order harmonics.

These power outputs are computed assuming that the grid is driven to zero. If the plate current is much greater than normal when the proper bias is applied, it is often an indication that the tube is oscillating or that it is picking up radio frequency voltage from some other circuit. An inductive grid leak often aggravates this condition.

CLASS "A" AUDIO AMPLIFIER PERFORMANCE

TABLE III (SINGLE TUBE)

Plate Supply Volts	Plate Milli-amperes	Grid Bias Volts	Plate Input Watts	Load Resistance Ohms	Power Output Watts	Plate Efficiency Per Cent	Per Cent Second Harmonic
1000	60	– 40	60	10,000	6	11	3
1500	100	– 60	150	10,000	16	11	4
2000	75	–110	150	20,000	32	21	5
2500	60	–150	150	30,000	40	27	5

TABLE IV (SINGLE TUBE)

Plate Supply Volts	Plate Milli-amperes	Grid Bias Volts	Plate Input Watts	Load Resistance Ohms	Power Output Watts	Plate Efficiency Per Cent	Per Cent Second Harmonic
1000	57	– 42	57	10,000	7	12	10
1500	90	– 65	135	10,000	18	13	10
2000	75	–110	150	15,000	36	24	10
2500	60	–150	150	25,000	44	29	10

CLASS "A" AUDIO PUSH-PULL AMPLIFIER PERFORMANCE

TABLE V (TWO TUBES)

Plate Supply Volts	Plate Milli-amperes	Grid Bias Volts	Plate Input Watts	Plate-to-Plate Load Ohms	Power Output Watts	Plate Efficiency Per Cent	Per Cent Third Harmonic
1000	100	– 45	100	16,000	16	16	3
1500	180	– 65	270	16,000	43	16	3
2000	150	–110	300	20,000	82	27	3
2500	120	–150	300	40,000	96	32	4

GAMMATRONS HAVE TANTALUM PLATES and GRIDS!

Engineering Data Sheet
HK-354-6
(Revised)

AUDIO AMPLIFIER—CLASS "B" MODULATOR

Where outputs in excess of the capacity of two Type **HK-354 GAMMATRONS** in Class A are required, for modulation or high power audio work, it is desirable to use two **HK-354's** in Class B. In this connection efficiencies of more than twice those in Class A can be obtained. Operated in this manner only one tube works at a time. One tube operates during half of the cycle while the other is idle, and during the remaining half cycle the situation is reversed.

The Type **HK-354 GAMMATRON** is particularly adapted to Class B work since it will stand a high plate potential, has a low plate resistance and has a relatively high amplification factor. Thus, it has a large power output, and is an easy tube to drive.

To get any reasonable amount of power out of a Class B amplifier it is necessary to drive the grids positive. This means that the driving tubes must supply power at the peak of the grid swing. The driver must have sufficient capacity to supply the peak power without appreciable drop in excitation voltage. This requires a low inpedance driver circuit if distortion is to be avoided.

Since only one tube works at a time, the plate-to-plate load resistance (indicated below) is four times the single plate load resistance. Frequently, it is convenient in considering impedance relations to match the secondary impedance to one-half of the primary using the single plate load value. There is always the possibility that a high power Class B stage will oscillate. Such a condition is indicated when the amplifier draws considerable plate current even though the correct bias is used, and no signal is applied. A cure is usually effected by the use of plate resistors (about 10 ohms), and loading each half of the input transformer secondary with about 50,000 ohms.

It is well to use a battery bias. If a bias rectifier is used, care should be taken to see that the bleeder resistance is not too high, and that it is shunted by at least an 8 mf. condenser.

Table VI shown below gives the maximum signal operation of a pair of Type **HK-354 GAMMATRONS** in Class B push-pull. Table VII contains data for a pair of the same tubes with less driving power available. No allowance is made in either case for transformer losses. The driving equipment indicated is in the nature of a suggestion. Tubes of equivalent power output may be used as desired. Further information on the operation of Class B amplifiers may be found in current texts and literature.

CLASS "B" AUDIO AMPLIFIER PERFORMANCE

(TWO TUBES)

(Total arithmetic sum of 3rd, 5th, 7th, and 9th harmonics not to exceed 2.5%)

TABLE VI (WITH MAXIMUM SIGNAL)

Plate Potential Supply Volts	No-signal[1] Plate Milli-amperes	Grid Bias in Volts	Plate-to-Plate Load Resistance Ohms	Grid-to-Grid Peak Signal Volts	Peak[2] Driving Power Watts	Plate Current Milli-amperes	Power Output in Watts	Plate[3] Loss in Watts	Plate Efficiency in Watts	Driver Trans-former Ratio [See (A) below]
1000	40	– 60	10,000	340	14	232	162	70	70	1.5 :1
1500	60	– 95	10,000	440	20	324	315	170	65	1.25:1
2000	100	–125	10,000	500	20	388	488	288	63	1.0 :1
2500	80	–165	15,000	560	20	350	577	298	66	0.9 :1
3000	65	–205	22,000	630	20	313	665	273	71	0.8 :1

TABLE VII (WITH MEDIUM SIGNAL)

[See (B) below]

1000	40	– 60	10,000	260	5	178	96	82	54	1.75:1
1500	60	– 95	10,000	320	5	236	166	188	47	1.50:1
2000	100	–125	10,000	380	5	294	276	312	47	1.0 :1
2500	80	–165	15,000	430	5	267	333	333	50	0.9 :1
3000	65	–205	22,000	510	5	252	431	325	57	

(A) Suggested driver, four Type 2A5 or 42 tubes in push-pull parallel triode connection (screen tied to plate) with 350 plate volts and fixed bias.
(B) Suggested driver, two Type 2A5 or 42 tubes in push pull triode connection (screen tied to plate) with 350 plate volts and fixed bias.
[1]Lower no-signal plate currents will cause somewhat higher distortion.
[2]Instantaneous peak power in watts drawn by grid at crest of wave. Effective power is one-half this value.
[3]Plate loss may be slightly greater at lower signal levels.

GAMMATRONS HAVE TANTALUM PLATES and GRIDS!