*DIGITRON–4 Character Side Viewing Cold-Cathode Fraction Register Tube

GR4G

Limit Ratings

Maximum cathode current—1	5 mA
Maximum cathode current—$\frac{1}{4}$, $\frac{1}{2}$, $\frac{3}{4}$	7 mA
Minimum voltage necessary to ensure breakdown	200 V

Characteristics

Nominal running voltage Ia = 5 mA	170 V

A cathode left floating will assume some potential between that of the anode and the glowing cathode.

Recommended Operating Conditions

Under the recommended D.C. operating conditions with the characters switched sequentially every 24 hours, an average life of 3,500 hours can be expected.

D.C. operation

Anode supply voltage — Ra = 12kΩ		250 V

A.C. operation

(Unsmoothed half-wave rectified 50 c.p.s. A.C.)

Anode supply voltage — Ra = 12kΩ	200-220 V r.m.s.	
Ra = 18kΩ	220-250 V r.m.s.	
Cathode 1 equalizing resistor		10kΩ

* Registered Trade Mark

GR4G

DIGITRON–4 Character Side Viewing Cold-Cathode Fraction Register Tube

Mechanical Data

Mounting position	Any
Base	B26A
Socket	B17, B26A or B27A

Base Connections
(underside view)

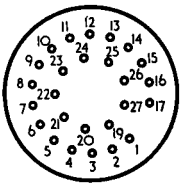

FRONT

Pin	6	Anode
	7	$\frac{1}{2}$
	8	$\frac{3}{4}$
	15	1
	17	$\frac{1}{4}$

All other pins to be left unconnected.

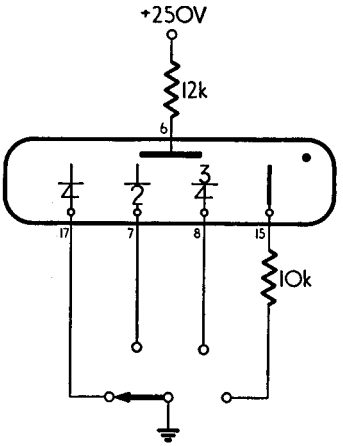

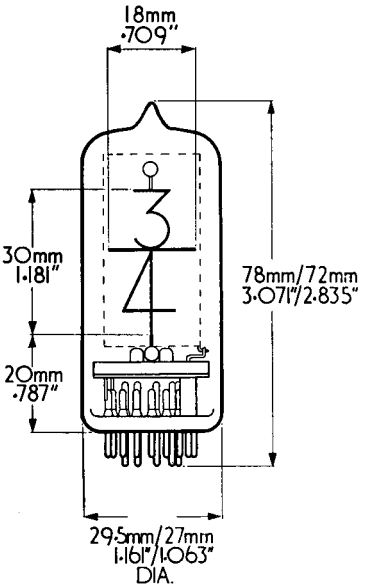

*DIGITRON—4 Character Side-Viewing Cold-Cathode Fraction Register Tube

GR4G

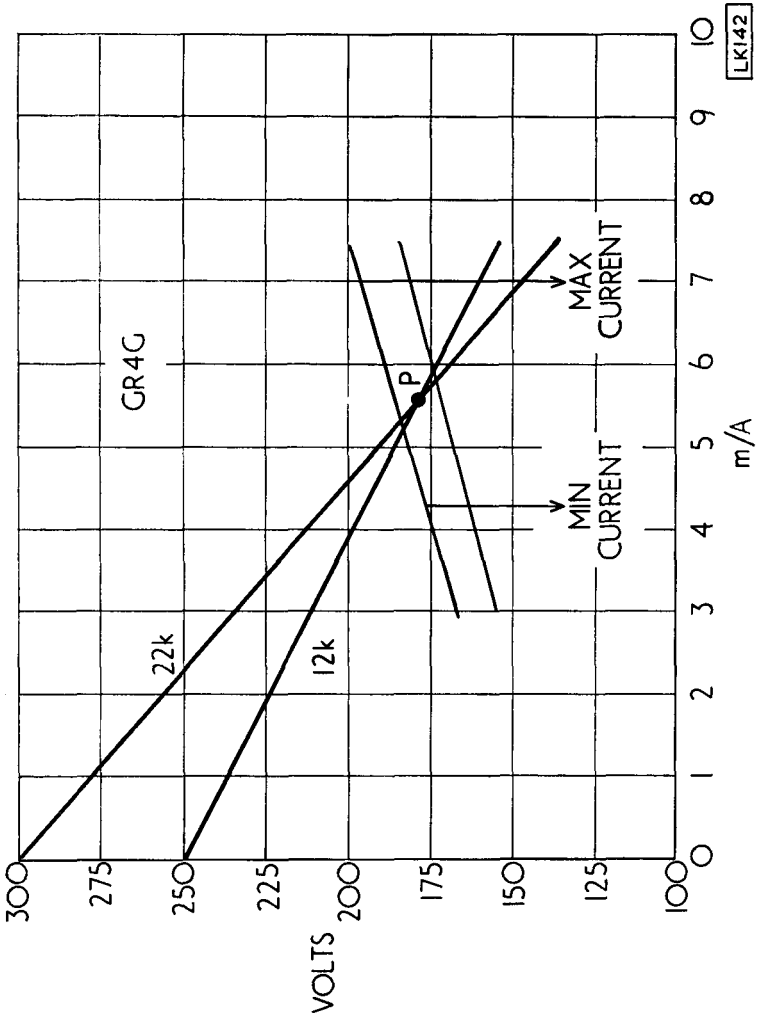

Operating Characteristics

*Registered Trade Mark