*DIGITRON–2 Character Side-Viewing Cold-Cathode + and — Register Tube

GR2G

Limit Ratings

Maximum cathode current (+ sign)	5 mA
Maximum cathode current (— sign)	3 mA
Minimum voltage necessary to ensure breakdown	180 V

Characteristics

Nominal running voltage	168 V

A cathode left floating will assume some potential between that of the anode and the glowing cathode.

Recommended Operating Conditions

Under the recommended D.C. operating conditions with the characters switched sequentially every 24 hours, an average life of 4,000 hours can be expected.

Anode supply voltage	250 V
Cathode + series resistor	15kΩ
Cathode — series resistor	27kΩ

* Registered Trade Mark

GR2G

DIGITRON—2 Character Side-Viewing Cold-Cathode + and — Register Tube

Mechanical Data

Mounting position	Any
Base	B26A
Socket	B17A, B26A or B27A

Base Connections
(underside view)

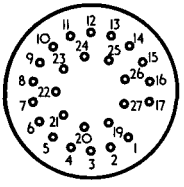

FRONT

Pin 6 Anode
Pin 10 —
Pin 14 +

Note—All other pins are to be left unconnected.

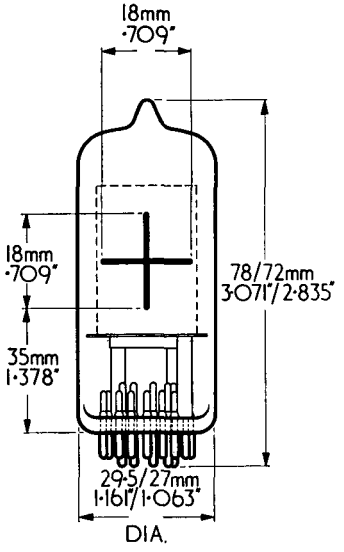

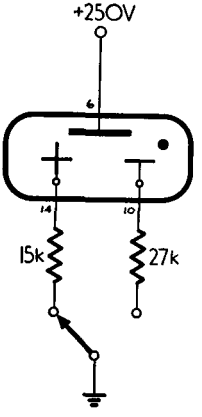

*DIGITRON—2 Character Side-Viewing Cold-Cathode + and − Register Tube

GR2G

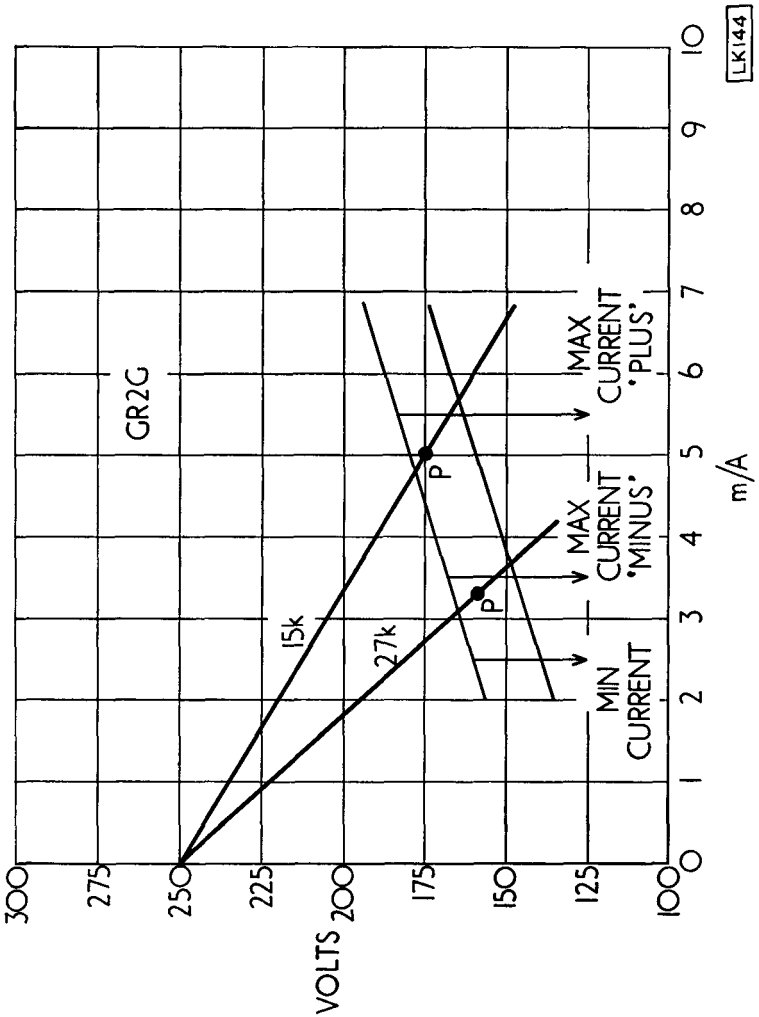

Operating Characteristics

*Registered Trade Mark