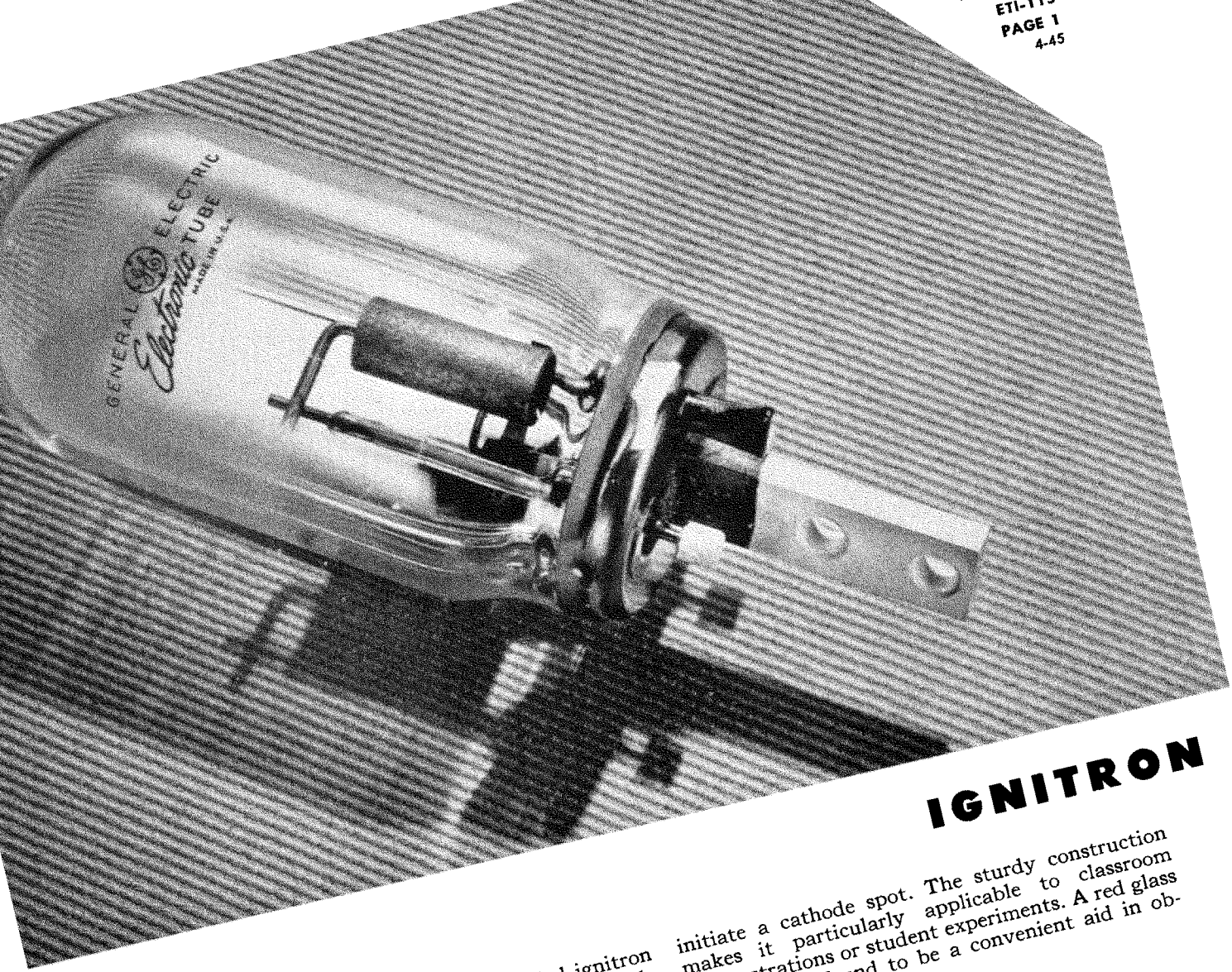

IGNITRON

DESCRIPTION

The GL-427 is a small glass, air-cooled ignitron tube which combines the advantages of simple construction and visibility of operation. It is designed primarily for demonstrating the unique and interesting characteristics of ignitors used to initiate a cathode spot. The sturdy construction makes it particularly applicable to classroom demonstrations or student experiments. A red glass filter will be found to be a convenient aid in observing ignitor operation.

TECHNICAL INFORMATION

These data are for reference only. For design information refer to specifications.

GENERAL CHARACTERISTICS

Number of electrodes	3
Electrical	
Typical arc drop	10–15 volts
Type of cooling	
Free-air circulation	
Average anode current	5 amperes
Ambient temperature	25 centigrade
Condensed mercury temperature	100 centigrade
Forced-air circulation†	
Average anode current	10 amperes
Ambient temperature	25 centigrade
Condensed mercury temperature	100 centigrade

†An ordinary desk fan will provide sufficient cooling for most uses.

GENERAL ELECTRIC

TECHNICAL INFORMATION (CONT'D)

Mechanical

Net weight, approx	1.5	pounds
Shipping weight, approx	3	pounds

MAXIMUM RATINGS

Anode voltage, maximum inverse and forward	350	volts
Anode current		
Maximum instantaneous	30	amperes
Maximum average, free-air circulation	5	amperes
Maximum average, forced-air circulation	10	amperes
Maximum temperature, condensed mercury	100	centigrade
Ignitron voltage		
Maximum instantaneous allowed, ignitor positive	350	volts
Maximum instantaneous required, ignitor positive*	150	volts
Maximum instantaneous allowed, ignitor negative	5	volts
Ignitor current		
Maximum instantaneous allowed	100	amperes
Maximum instantaneous required*	30	amperes
Maximum average allowed	2	amperes
Maximum averaging time	10	seconds
Maximum ignition time*	100	microseconds

*Application of either the maximum required ignitor voltage or current will provide a cathode spot in maximum ignition time.

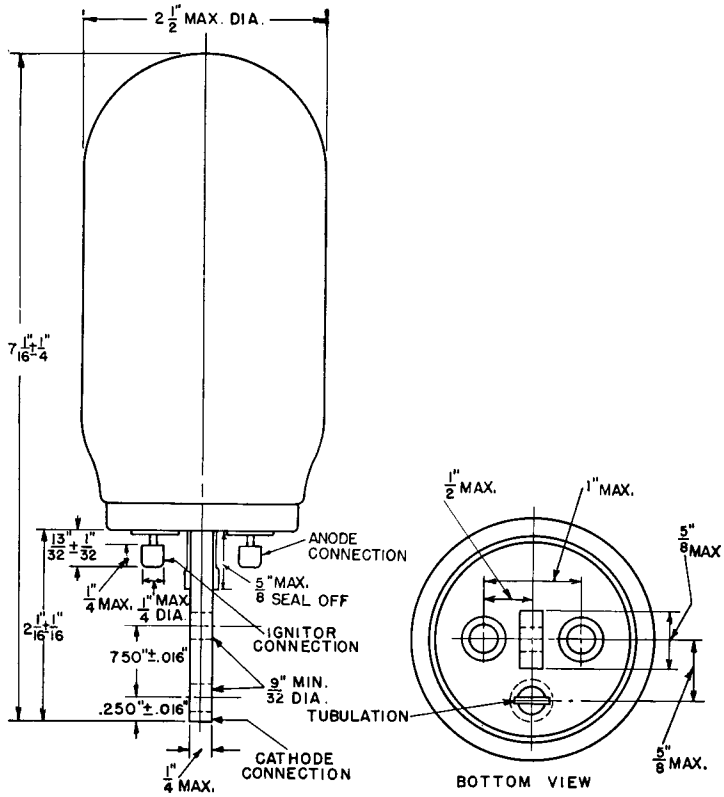

OUTLINE
GL-427 IGNITRON

K-6966951 6-30-44

Electronics Department
GENERAL ELECTRIC
Schenectady, N. Y.