Miniature Reference Tube

GD 85 M/S
(CV.449 Issue 4)

Limit Rating

Minimum anode current	1·0 mA
Maximum anode current	10 mA
Maximum striking voltage (normal room lighting 5/50 ft. (candles)	115 V
Maximum temperature coefficient (over range +25 to +85°C)	—3·5 mV/°C

Characteristics

Running voltage at 6·0 mA	85 ± 2 V
Regulation (5·8 to 6·2 mA)	0·18 V
Regulation (1·0 to 10 mA)	4·0 V
Maximum incremental resistance at 6·0 mA	450 Ω
Maximum voltage jump (anode resistance 5kΩ, 1 to 10 mA)	100 mV peak
Maximum variation of running voltage during a life period of 1,000 hrs. at 6·0 mA	0·5%
Maximum variation of running voltage after the first 300 hrs. at 6·0 mA	0·2%
Minimum short term (100 hrs. max.) variation of running voltage after the first 200 hrs. at 6·0 mA	0·1%

N.B.——Equilibrium conditions are reached after three minutes' operation.

GD85M/S
(CV.449 Issue 4)

Miniature Reference Tube

Mechanical Data

Mounting position	Any
Base	B7G

Base Connections
(underside view)

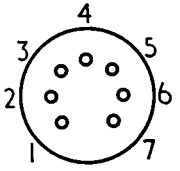

Pin	1	Anode
	2	Cathode
	3	Do not connect
	4	Cathode
	5	Anode
	5	Do not connect
	7	Cathode

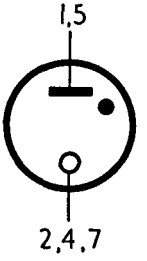

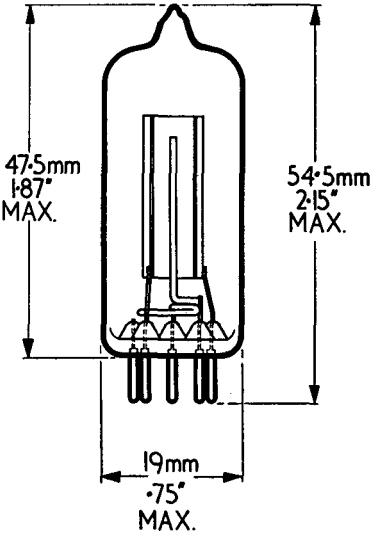

Ruggedized Miniature Reference Tube

GD 85 M/R

Limit Rating

Minimum anode current	1·0 mA
Maximum anode current	10 mA
Maximum striking voltage (normal room lighting 5/50 ft. candles)	115 V
Maximum temperature coefficient (over range +25 to +85°C)	—3·5 mV/°C
Maximum vibration (continuous operation)	2·5 g
Maximum shock (short duration)	500 g

Characteristics

Running voltage at 6·0 mA	85 ± 2 V
Regulation (5·8 to 6·2 mA)	0·18 V
Regulation (1·0 to 10 mA)	4·0 V
Maximum incremental resistance at 6·0 mA	450 Ω
Maximum voltage jump (anode resistance 5kΩ, 1 to 10 mA)	100 mV peak
Vibration noise, 20-500 c.p.s. at 2·5 g	5 mV r.m.s.
500-2,000 c.p.s. at 2·5 g	15 mV r.m.s.
Maximum variation of running voltage during a life period of 1,000 hrs. at 6·0 mA	0·5%
Maximum variation of running voltage after the first 300 hrs. at 6·0 mA	0·2%
Maximum short term (100 hrs. max.) variation of running voltage after the first 300 hrs. at 6·0 mA	0·1%

GD85M/R

Ruggedized Miniature Reference Tube

Mechanical Data

Mounting position	Any
Base	B7G

Base Connections
(underside view)

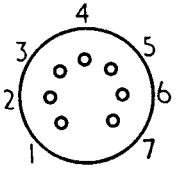

Pin	1	Anode
	2	Cathode
	3	Do not connect
	4	Cathode
	5	Anode
	6	Do not connect
	7	Cathode

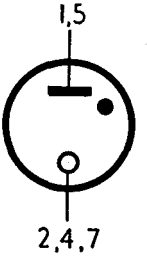

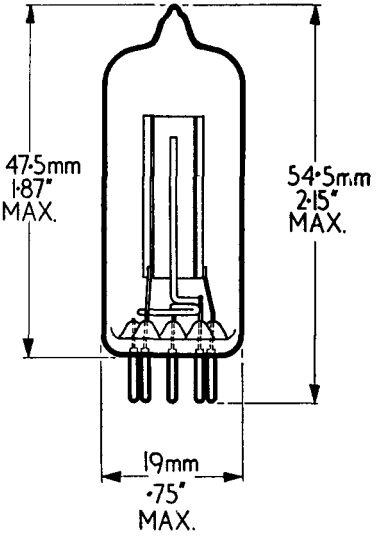

Reliable-Miniature Reference Tube

GD 85P/RS
(CV.4048)

Limit Ratings

Minimum anode current	1·0 mA
Maximum anode current	10 mA
Maximum striking voltage (normal room lighting 5/50 ft. candles)	115 V
Maximum temperature coefficient	
(over range —55°C to +25°C)	—10 mV/°C
(over range +25°C to +90°C)	—5 mV/°C
Maximum acceleration (continuous operation)	2·5 g
Maximum shock (short duration)	500 g

Characteristics

Running voltage at 6·0 mA	85 ± 2 V
Regulation (5·8 to 6·2 mA)	0·18 V
(1·0 to 10 mA)	4·0 V
Incremental resistance at 6 mA	450 Ω
Maximum voltage jump (Anode resistance 5 kΩ. 1 to 10 mA)	100 mV peak
Maximum variation of running voltage at 6 mA	
During the first 300 hours	0·3%
During the subsequent 10,000 hours	0·2%
Typical drift of running voltage per 1,000 hours after the first 300 hours	0·1%

N.B.—Equilibrium conditions are reached after three minutes operation at 6·0 mA

GD 85P/RS
(CV.4048)

Reliable-Miniature Reference Tube

TESTS

To be performed in addition to those applicable in K1001.

Test Conditions—unless otherwise specified.

Va(b) (V)	R lim. (ohms)	Ia (mA)
(Note 1)	5K	6·0 (Note 2)

A d.c. voltage not exceeding 100 volts shall be applied between Anode and Cathode and shall be increased steadily at a rate not exceeding 25 volts/second until the valve strikes. The ripple content of the supply shall not exceed 0·25%.

After the valve has struck, the supply voltage shall be further increased until the anode current is 6·0 mA. It shall be maintained constant for 3 minutes before any characteristic, other than striking voltage, is measured.

K1001	Test	Test Conditions	AQL %	Insp. Level	Symbol	Limits Min.	Limits Max.	Units	Notes
7·1	Glass Strain	No Voltages	6·5	I					
	Group A								
	Striking Voltage			100%	Va	—	115	V	1
	Maintaining Voltage			100%	Vb	83	87	V	

Reliable-Miniature Reference Tube

GD 85P/RS
(CV.4048)

Tests (*cont.*)

K1001	Test	Test Conditions	AQL %	Insp. Level	Sym-bol	Limits Min.	Limits Max.	Units	Notes
	Regulation (1)	δ Va for change of Ia from 5·8 to 6·2 mA		100%			0·18	V	
	Voltage Jumps	Ia varied from 1·0 to 10·0 mA Ra = 500 ohms		100%			100	mV p/p	2
	Oscillation	Ia varied from 1·0 to 10·0 mA Ra = 500 ohms		100%			5	mV p/p	
	Microphonic Noise	Ra = 500 ohms		100%			15	mV p/p	4
	Leakage Current	Supply Voltage = 55 V d.c. Ra = 1 megohm		100%			5	μA d.c.	

GD85P/RS (CV.4048)

Reliable-Miniature Reference Tube

Tests (*cont.*)

K1001	Test	Test Conditions	AQL %	Insp. Level	Symbol	Limits Min.	Limits Max.	Units	Notes
	Group B								
	Temperature Coefficient (1)	Temperature varied from —55°C to +25°C		TA					3, 6
	Temperature Coefficient (2)	Temperature varied from + 25°C to + 90°C		TA					3, 6
	Striking Voltage	Measure at Temperature = —50°C		TA			115	V	1
	Regulation	δ Va for change of Ia from 1·0 to 10·0 mA Temperature = + 90°C							3, 6

Reliable-Miniature Reference Tube

GD 85P/RS
(CV.4048)

Tests (*cont.*)

K1001	Test	Test Conditions	AQL %	Insp. Level	Sym-bol	Limits Min.	Limits Max.	Units	Notes
	Group C								
	Striking Voltage (Dark Strike)		2·5	I	Va		115	V	5
	Regulation (2)	δ Va for change of Ia from 1·0 to 10·0 mA	2·5	I			4·0	V	
	Group D								
7·2	Base Strain	No voltages	6·5	IA					
11·2	Resonance Search (1)	Ra = 27K Frequency = 25 to 500 c/s		IC					
11·1	Vibration Noise Output		2·5		Va (AC)		5	mV RMS	
	Resonance Search (2)	Ra = 27K Frequency = 500 to 2500 c/s		IC					

GD 85P/RS
(CV.4048)

Reliable-Miniature Reference Tube

Tests (*cont.*)

K1001	Test	Test Conditions	AQL %	Insp. Level	Symbol	Limits Min.	Limits Max.	Units	Notes
11·1	Vibration Noise Output		2·5		Va (AC)		15	mV RMS	
11·3	Fatigue Test	Ia = 0 Duration 30 + 30 + 39 hours. Acceleration = 5g. Frequency = 170 c/s		IA					
	Post Fatigue Test	**Combined AQL**	4·0						
	Anode Voltage Change		2·5		δ Va		±0·7	V	
11·1	Vibration Noise		2·5				30	mV p/p	

Reliable-Miniature Reference Tube

GD 85P/RS
(CV.4048)

Tests (*cont.*)

K1001	Test	Test Conditions	AQL %	Insp. Level	Symbol	Limits Min.	Limits Max.	Units	Notes
11·4	Shock Test	Ia = 0 Acceleration = 500g.		IA					
	Post Shock Test	**Combined AQL**	4·0						
	Anode Voltage Change		2·5	IA	δ Va		± 0·7	V	
11·1	Vibration Noise		2·5				30	mV p/p	
	Group E								
AVI/5	Life Test								
	End Point 1000 Hours								
	Inoperatives		2·5	IA					
	Striking Voltage		2·5		Va		115	V	

GD 85P/RS (CV.4048)

Reliable-Miniature Reference Tube

Tests (*cont.*)

K1001	Test	Test Conditions	AQL %	Insp. Level	Symbol	Limits Min.	Limits Max.	Units	Notes
	Change of maintaining voltage during life		2·5				0·4	V	
	Regulation		2·5				0·18	V	
	Group F								
AIX/25	Electrical Re-test after 28 days holding period.			100%					
	Inoperatives		0·5						
	Striking Voltage		0·5	100%			115	V	
	Maintaining Voltage		0·5	100%		83	87	V	
	Regulation (1)	δ Va for change of Ia from 5·8 to 6·2 mA	0·5	100%			0·18	V	

Reliable-Miniature Reference Tube

GD85P/RS
(CV.4048)

Notes

1. Test to be conducted in normal ambient room lighting (5/50 ft. candles).

2. A calibrated amplifier detector with C.R.T. indicator having a substantially linear response over the range 50/5000 c/s is to be connected between the anode and cathode. The anode current is to be varied slowly from 1·0—10·0 mA and back to 1·0 mA at least three times.

3. The tube voltage drop shall be measured at 10°C steps over the temperature range specified.

4. The valve shall be tapped and the noise shall not exceed the limit specified.

5. This test is to be conducted in total darkness after the valves have been held in total darkness for 24 hours.

6. In group B, the first two tests and the last test are under review. Limit figures for these tests will be supplied when known.

GD85P/RS
(CV.4048)

Reliable-Miniature Reference Tube

Mechanical Data

Mounting Position	Any
Base	B7G

Base Connections
(underside view)

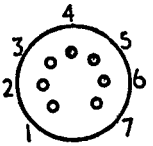
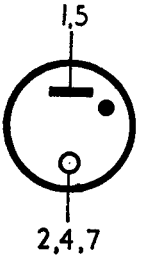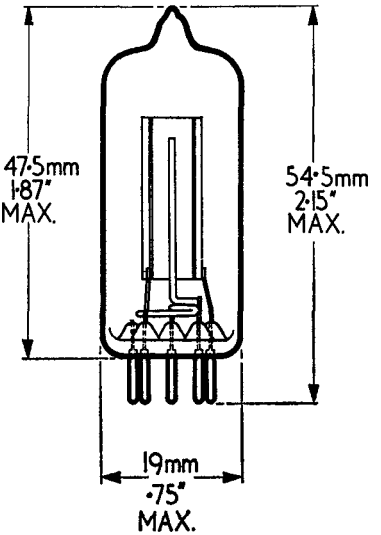
Pin	1	Anode
	2	Cathode
	3	Do not connect
	4	Cathode
	5	Anode
	6	Do not connect
	7	Cathode