ITT

APPLICATION NOTES

Storage Image Tubes Types FW-231 and FW-232

ELECTRONIC CAMERA TUBES FEATURING LOW LIGHT LEVEL INTEGRATION AND CONTRAST ENHANCEMENT FOR USE IN HIGH-SPEED PHOTOGRAPHY, PULSED LIGHT SYSTEMS, AND HIGH-SPEED SINGLE-EVENT STUDIES.

The Storage Image Tube is a new type of electron device combining the imaging properties of a conventional image tube with the storage properties of a storage tube. Images may be written, retained, and examined in detail. A simple erase pulse prepares the tube for the next exposure. Storage times ranging from a few seconds to several minutes are possible depending on the method of operation. The tube is essentially an electronic camera including in its many uses low light level integration, contrast enhancement, high-speed photography, pulsed light systems, and high-speed single-event studies.

The FW-231 and FW-232 are identical in all respects except for the viewing screen phosphor. The FW-231 has a P-11 phosphor and is recommended in applications where the stored image may be photographed. The FW-232 has a P-20 phosphor and is recommended in cases where only visual observation is involved.

COMPONENTS and INSTRUMENTATION Laboratory
Fort Wayne, Indiana

A DIVISION OF INTERNATIONAL TELEPHONE AND TELEGRAPH CORPORATION

STORAGE IMAGE TUBE CHARACTERISTICS

	MINIMUM	MEDIAN	MAXIMUM	
Electrical Characteristics:				
Cathode potential: During write (1)	-400	-600	-800	volts
Cathode potential: During read	0	0	0	volts
Cathode potential: During erase	0	0	0	volts
Collector electrode potential (2)	5	50	200	volts
Backing electrode potential:				
Bias (3)	5	10	20	volts
Erase pulse (4)	0	1.4	3	volts
Viewing screen potential (1) (5)	8	10	12	kilovolts
Axial magnetic focusing field (1)	400	500	600	gauss
General Characteristics:				
Photocathode: Spectral response (6)		S11		
Photocathode: Luminous sensitivity (7)	15	30		μa/lumen
Photocathode: Radiant sensitivity (8)	0.015	0.024		amp/watt
Photocathode: Current during read and erase (9)	—	0.1	1	μa
Photocathode: Useful diameter	—	0.5	—	inches
Viewing screen:				
Phosphor type (10)				
FW231		P11, aluminized		
FW232		P20, aluminized		
Luminous efficiency (11)				
FW231	—	0.08	—	lumen/μa
FW232	—	0.45	—	lumen/μa
Useful Diameter	—	1.5	—	inch
Resolution (12)	8	10	—	line pairs/mm
Image magnification (13)	0.9	1.0	1.1	—
Threshold sensitivity (14)	—	1	3	10^{-3} foot candle second
Viewing screen brightness level: (15)				
FW231:	—	0.04	0.4	millilambert
FW232:	—	0.2	2	millilambert
Viewing time: (16)				
Fixed bias	5	—	—	seconds
Adjustable bias	60	—	—	seconds
Levels usable (17)	3	5	—	—
Erasing time (4)	—	—	0.5	second

NOTES

Care must be taken to avoid over-charging of the storage surface, therefore the illumination- time product during write should be limited to approximately 20 times the threshold sensitivity level.

1. In the magnetically focused storage image tube, the conditions of focus must be met for both the input (i.e. storage) section and the output (i.e. image) section of the tube. This requires that either the focusing field or the accelerating voltages, or both, be adjustable. In practice, a fixed magnetic field has been employed and focus is achieved by adjusting the voltages. The voltages required for focusing should fall within the ranges indicated for an axial magnetic field strength of 500 gauss. The magnetic field strength may be changed within the range indicated and satisfactory operation attained, but the focus voltages mu be adjusted accordingly.
   The cathode pulse voltage during write is adjusted so that the photoelectron image in the input section is focused onto the storage surface. The viewing screen voltage is adjusted during read when the cathode potential is at zero. When the output section is in focus, a shadow image of the 500 mesh screen can be seen with a microscope.
2. Adjustment of the collector potential should be made prior to the write phase of the tube's operational cycle and should be made for optimum display uniformity. Within the range indicated this adjustment is not critical. In some tubes the viewing time may be increased at the higher collector potentials.
3. The backing electrode potential should be continuously variable within the range indicated. Prior to writing, this potential is increased to the point where uniform transmission occurs and the storage surface is allowed to charge to flood cathode potential. The backing electrode potential is then reduced to cutoff and the image written. After writing, this potential is again increased to some nominal point where the stored image may be observed. A slight shift from this nominal value at this point may be desirable to increase or decrease contrast. The optimum backing electrode potential varies slightly from tube to tube, but it falls within the range indicated.
   Since the voltage required for cutoff may tend to increase after extended erasures, it is desirable that the initial potential applied to the backing electrode be in the lower end of the indicated range.
4. To erase a written image (prepare the storage surface for the next exposure), a simple d-c pulse may be superimposed on the nominal backing electrode potential used during read. In instances where more than a 200-millivolt signal has been written into the storage surface, a 0.5-second pulse equal in magnitude to the cutoff potential (see Figure 5) is usually sufficient. In extreme cases where overcharging has occurred, a pulse duration of several seconds may be required.
5. The maximum viewing screen potential is specified to provide a suitable margin of safety relative to internal glow or flashover.
6. The photocathode is of the cesium-antimony type with the S11 spectral response characteristics shown in Figure 1.
7. With standard tungsten light source (2870 degrees K color temperature).
8. Calculated from the approximate relationship: peak radiant sensitivity in amperes per watt equals 5×10^{-4} times the luminous sensitivity in microamperes per lumen; this relationship being derived for a photocathode having a typical S-11 response peaking at 4400 Angstroms.
9. The cathode current during read (flood beam current) is the result of the illumination of the photocathode by a small lamp such as a GE No. 328 placed in front of the objective lens of the viewing system. This lamp may be supported by a spider attached to a lens shield and is located on axis at the position providing optimum uniformity of cathode illumination. The brightness of the flood lamp, and subsequently the amount of flood beam current and the brightness of the output image may be controlled by adjusting the flood lamp potential.

PHOTOCATHODE AND PHOSPHOR CHARACTERISTICS

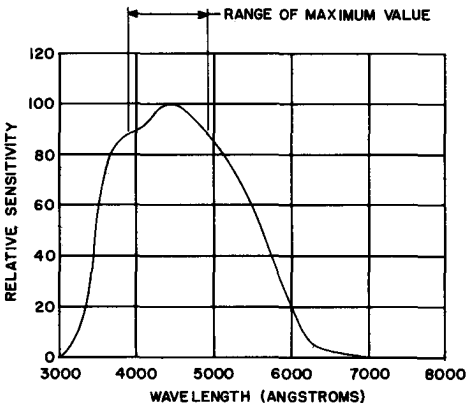

FIGURE 1
S11 SPECTRAL RESPONSE

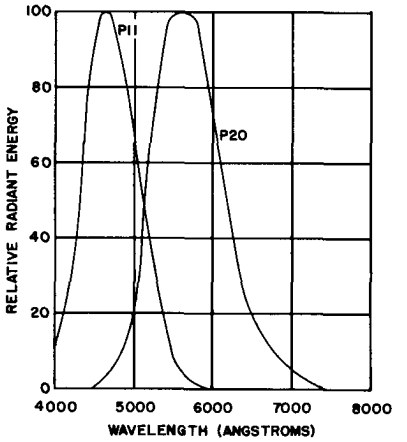

FIGURE 2
SPECTRAL EMISSION OF
P11 AND P20 PHOSPHORS

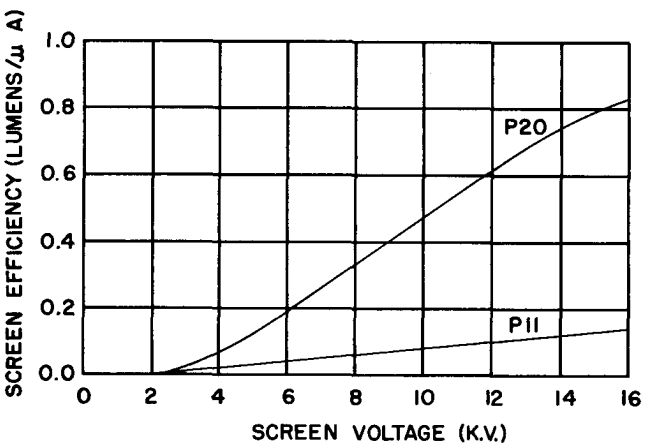

FIGURE 3
TYPICAL LUMINOUS EFFICIENCY OF
P11 AND P20

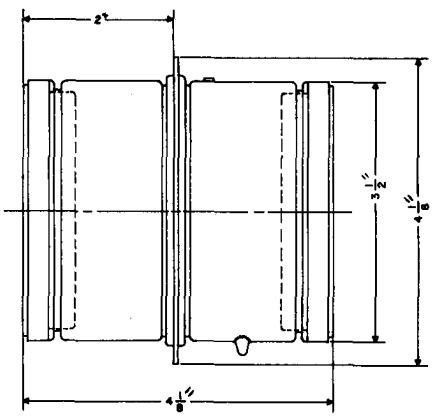

FIGURE 4
OUTLINE DRAWING

10. The FW-231 with the blue P-11 phosphor is recommended for applications where the receiver has a high blue sensitivity. It is recommended, therefore, in applications in which the stored image is to be photographed.
    The FW-232 is recommended for applications where only visual observation of the stored image is involved since the yellow-green output of the P-20 phosphor falls at the peak of the normal eye spectral response curve.
    For the spectral emission characteristics of both the P-11 and the P-20 phosphor, see Figure 2.
11. The luminous efficiency figures given are in terms of total lumens emitted by the phosphor per microampere of bombarding current at a phosphor screen potential of 10 kilovolts. For efficiency values at other voltages, refer to Figure 3.
12. The resolution of the storage image tube is defined as the maximum number of line pairs (one black plus one white, of equal width) per millimeter that can be projected onto the photocathode, stored, and read out in the stored image.
    . Image magnification and distortion are dependent upon the uniformity of the magnetic focusing field.
14. The threshold sensitivity is expressed in terms of the detectable illumination-time product in foot candle seconds, where the illumination (2870 degrees K source) is measured in the plane of the photocathode and the time involved is the time of the write or exposure phase of the tube's operational cycle. This illumination-time product is a constant over several orders of magnitude of exposure time. Care must be taken to avoid over-charging of the storage surface; therefore the illumination-time product during write should be limited to approximately 20 times the threshold sensitivity level.
15. Values given are saturated values with 1 microampere total cathode current and with the storage surface at equilibrium potential. For threshold images, values may be as low as 5 percent of the saturated values.
16. Because of volume leakage in the storage surface material, the front surface potential with its stored charge pattern drifts slowly. With a fixed backing electrode voltage, change in contrast and eventual erasure of the stored image occurs. This limits the viewing time. If, however, a slight compensating adjustment is made in the backing electrode voltage, contrast is enhanced and the erasure is minimized. Viewing time, therefore, can be significantly extended by occasional readjustment of the bias potential.
17. The number of output levels, each related to a different input, that can be distinguished from one another regardless of location on the storage surface.

The brightness of the image presented on the viewing screen during read is dependent upon the magnitude of the flood current and the bias level of the backing electrode. The flood current can be controlled by the brightness of the flood lamp and the bias can be controlled by adjusting the backing electrode potential. A typical set of transconductance curves (Figure 5) shows the relationship between viewing screen brightness and storage surface potentials for various backing electrode potentials. Maximum viewing screen brightness occurs when the storage surface is at cathode or equilibrium potential; in practice, however, for good contrast and maximum viewing time, the brightness usually should be from 5 to 15 percent of this maximum value.

The erase phase, during which the storage surface is erased by increasing the backing electrode potential sufficiently positive so that the flooding beam strikes all charged areas of the storage surface and discharges them to flood cathode potential. The backing electrode potential is then reduced to cutoff and the tube is ready for the next exposure.

In operation, the storage surface is first erased to equilibrium potential, and the backing electrode potential reduced to cutoff. Next, the charge image is written onto the storage surface. The brightness of the viewing screen image is then dependent upon the magnitude of the stored charge. For example, referring to Figure 5, if the flood current during erase had been adjusted to produce an equilibrium brightness of 100 microlamberts, if the backing electrode potential were 12 volts, and if the storage surface were charged to a potential of 0.2 volt by writing, the brightness of the viewing screen image should be 11 microlamberts. Minor adjustments in backing electrode potential at this point are permissible and sometimes desirable to enhance contrast, bring out background detail, or prolong viewing time.

STORAGE IMAGE TUBES
GENERAL DESCRIPTION AND OPERATION

GENERAL DESCRIPTION AND OPERATION

The Storage Image Tube is a new type of device which performs the function of an all-electronic, directly-viewed, integrating, *photographic system. It is capable of reproducing and holding a visible image for long periods of time and then of being rapidly* erased prior to further exposure.

Essential parts of this tube include a photocathode upon which the incoming image is focused, a storage surface which stores a charge image, and a viewing screen for viewing the output image. Magnetic focusing is used with unity image magnification in a uniform magnetic field. The focusing field usually is produced by a cylindrical permanent magnet, such as the FW 313.

This tube is capable of storing a range of levels (i.e., halftone images) without degradation during storage time or during continuous readout.

(1) The operation of the tube is divided into three separate phases:

The exposure or write phase, during which the photocathode is pulsed negatively by approximately 600 volts and the incoming optical image, focused on the photocathode, produces a photoelectron image which charges the storage surface by secondary emission. A positive charge image which corresponds to the optical image is thereby written onto the storage surface.

(2) The viewing or read phase, during which a continuous flood beam from the photocathode, at zero (reference) potential, is transmission modulated, without loss of charge, by the charge stored on the storage surface, and produces a visible image on the viewing screen.

During this phase the photocathode is flooded with light to produce a uniform flood beam of photoelectrons. The backing electrode potential is adjusted so that the electrons can be partially transmitted by the storage mush without striking the storage surface (typical control grid action). Variations in storage surface potential modulate the flood current trnsmitted by the storage mesh with the result that variations in viewing screen brightness are produced which correspond to intensity variations in the input image.

The brightness of the image presented on the viewing screen during read is dependent upon the magnitude of the flood current and the bias level of the backing electrode. The flood current can be controlled by the brightness of the flood lamp and the bias can be controlled by adjusting the backing electrode potential. A typical set of transconductance curves (Figure 5) shows the relationship between viewing screen brightness and storage surface potentials for various backing electrode potentials. Maximum viewing screen brightness occur when the storage surface is at cathode or equilibrium potentic in practice, however, for good contrast and maximum viewing time, the brightness usually should be from 5 to 15 percent of this maximum value.

(3) The erase phase, during which the storage surface is erased by increasing the backing electrode potential sufficiently positive so that the flooding beam strikes all charged areas of the storage surface and discharges them to flood cthode potential. The backing electrode potential is then reduced to cutoff and the tube is ready for the next exposure.

In operation, the storage surface is first erased to equilibrium potential, and the backing electrode potential reduced to cutoff. Next, the charge image is written onto the storage surface. The brightness of the viewing screen image is then dependent upon the magnitude of the stored charge. For example, referring to Figure 5, if the flood current during erase had been adjusted to produce an equilibrium brightness of 100 microlamberts, if the backing electrode potential were 12 volts, and if the storage surface were charged to a potential of 0.2 volt by writing, the brightness of the viewing screen image should be 11 microlamberts. Minor adjustments in backing electrode potential at this point are permissible and sometimes desirable to enhance contrast, bring out background detail, or prolong viewing time.

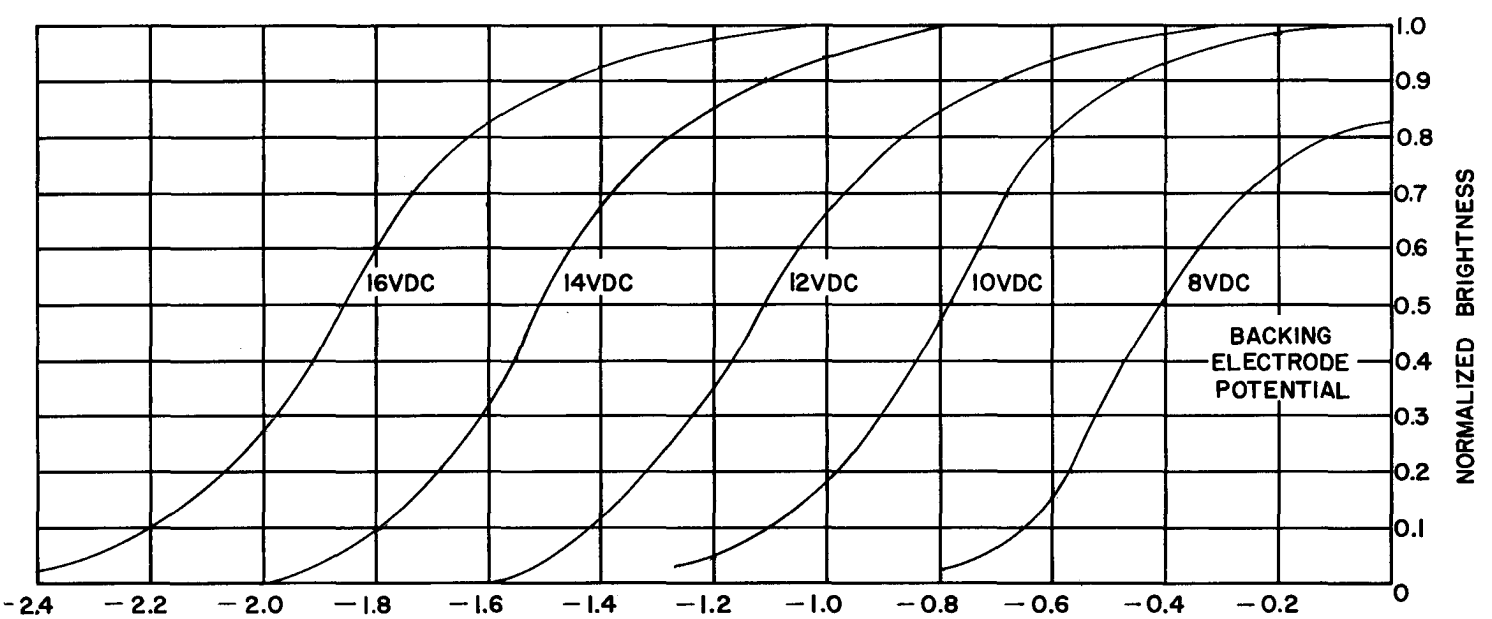

Address inquiries to: Director, Components and Instrumentation Laboratory, ITT

3700 E. Pontiac Street, Fort Wayne, Indiana **Telephone Eastbrook 7571**