TENTATIVE

DESCRIPTION:

THE FW-211 IS A 2-1/2 INCH IATRON (DIRECT VIEW STORAGE CATHODE-RAY TUBE) THAT PRODUCES A BRIGHT VISUAL DISPLAY OF ELECTRICALLY STORED INFORMATION. IT IS ELECTROSTATICALLY FOCUSED AND DEFLECTED. THE TUBE DISPLAYS BRIGHT IMAGES ON A DARK BACKGROUND THAT CAN BE VIEWED IN DIRECT DAYLIGHT, AND FEATURES THE ABILITY TO WRITE, STORE, AND ERASE INFORMATION AT WILL. GREY SHADES ARE PRODUCED IN ACCORDANCE WITH AMPLITUDE VARIATIONS OF THE INPUT SIGNAL. THE TUBE HAS TWO CONCENTRIC ELECTRON GUNS, A WRITING GUN, WHICH WRITES THE INPUT SIGNAL ON A STORAGE MESH, AND A FLOOD GUN, WHICH ILLUMINATES THE PHOSPHOR IN ACCORDANCE WITH THE STORED SIGNAL. THE CONCENTRIC ARRANGEMENT OF THE GUNS REDUCES DISTORTION OF THE WRITING BEAM TO A MINIMUM.

GENERAL:

DIMENSIONS	SEE OUTLINE AND OPERATIONAL SCHEMATIC ATTACHED	
NOMINAL TUBE DIAMETER	2-1/2	INCHES
MINIMUM USEFUL DISPLAY DIAMETER	1.8	INCHES
PHOSPHOR	P-20	ALUMINIZED
OPERATING POSITION		ANY
CATHODE PRE-HEAT TIME	60	SECONDS
FOCUS		ELECTROSTATIC
DEFLECTION		ELECTROSTATIC

TYPICAL OPERATING VALUES:

FLOOD SECTION

VIEWING SCREEN	8.5	VDC	600 UA MAXIMUM
BACKING ELECTRODE	+10	VDC	AND ERASE PULSES
COLLECTOR	+135	VDC	
ANODE #4	+65	VDC	
ANODE #3	+5 TO 25	VDC	ADJUST FOR BEST COLLIMATION
ANODE #2	+5 TO 25	VDC	ADJUST FOR BEST COLLIMATION
ANODE #1	+12	VDC	
FLOOD CATHODE	0	VDC	
HEATER	6.3	V AC OR DC	1.4 A

* TRADEMARK OF THE INTERNATIONAL TELEPHONE & TELEGRAPH CORPORATION

WRITING SECTION

HEATER	6.3	V	AC OR DC .6 A
CATHODE	-900	VDC	
GRID #1 CUTOFF (NOTE 1)	-50	VDC	RESPECT WRITE CATHODE
GRID #2	0	VDC	
GRID #3 (FOCUS)	+200		RESPECT WRITE CATHODE
MEAN DEFLECTION PLATE VOLTAGE	0	VDC	

TYPICAL PERFORMANCE CHARACTERISTICS:

RESOLUTION (NOTE 2)		
200 FT. LAMBERTS	120	LINES/INCH
2000 FT. LAMBERTS	80	LINES/INCH
4000 FT. LAMBERTS	40	LINES/INCH
LIGHT OUTPUT	4000	FT. LAMBERTS
WRITING SPEED		
20 VOLTS DRIVE TO 1000 FT. LAMBERTS	20000	IN/SECOND
ZERO BIAS TO 2000 FT. LAMBERTS	50000	IN/SECOND
ERASE TIME (NOTE 3)	5	MILLISECONDS
VIEWING TIME (NOTE 4)	5	SECONDS

NOTES:

1. VISUAL CUTOFF OF STORED, FOCUSED, UNDEFLECTED SPOT.

2. RESOLUTION MEASURED AT TUBE CENTER BY THE SHRINKING RASTER METHOD.

3. ERASE TIME IS THE SHORTEST TIME THAT INFORMATION CAN BE REMOVED FROM THE TUBE AFTER BEING STORED AT FULL BRIGHTNESS.

4. VIEWING TIME IS THE TIME THAT A SIGNAL STORED AT FULL BRIGHTNESS ANYWHERE IN THE DISPLAY AREA CAN BE VIEWED WITH ERASE PULSES APPLIED TO COUNTERACT ION WRITING.

* TRADEMARK OF ITT

SPECIAL PRECAUTIONS:

OBSERVE MAXIMUM RATINGS TO AVOID POSSIBLE DAMAGE TO THE TUBE. IN PARTICULAR THE VIEWING SCREEN VOLTAGE SHOULD BE LIMITED SO AS TO NEVER EXCEED 10 KV.

THE FULL VOLTAGE SHOULD NOT BE APPLIED TO THE VIEWING SCREEN INSTANTANEOUSLY. AN ORDINARY RC FILTER AT THE OUTPUT OF THE POWER SUPPLY WILL PROVIDE ADEQUATE ASSURANCE THAT THE VOLTAGE BUILD UP WILL NOT BE TOO ABRUPT. THE VIEWING SCREEN POWER SUPPLY SHOULD HAVE A SERIES RESISTANCE OF AT LEAST 1 MEG OHM.

REPEATED BOMBARDMENT WITH A HIGH CURRENT FOCUSED BEAM ON A SMALL AREA OF THE STORAGE SURFACE CAN BURN A DARK IMAGE INTO THE DISPLAY WHICH MAY REMAIN FOR SEVERAL HOURS OR EVEN PERMANENTLY. THEREFORE, THE DEFLECTION VOLTAGES SHOULD BE APPLIED BEFORE OPERATING THE WRITING BEAM.

ADDITIONAL INFORMATION FOR SPECIFIC APPLICATIONS CAN BE OBTAINED FROM THE

ELECTRON TUBE APPLICATIONS SECTION
ITT COMPONENTS DIVISION
POST OFFICE BOX 412
CLIFTON, NEW JERSEY

* TRADEMARK OF ITT

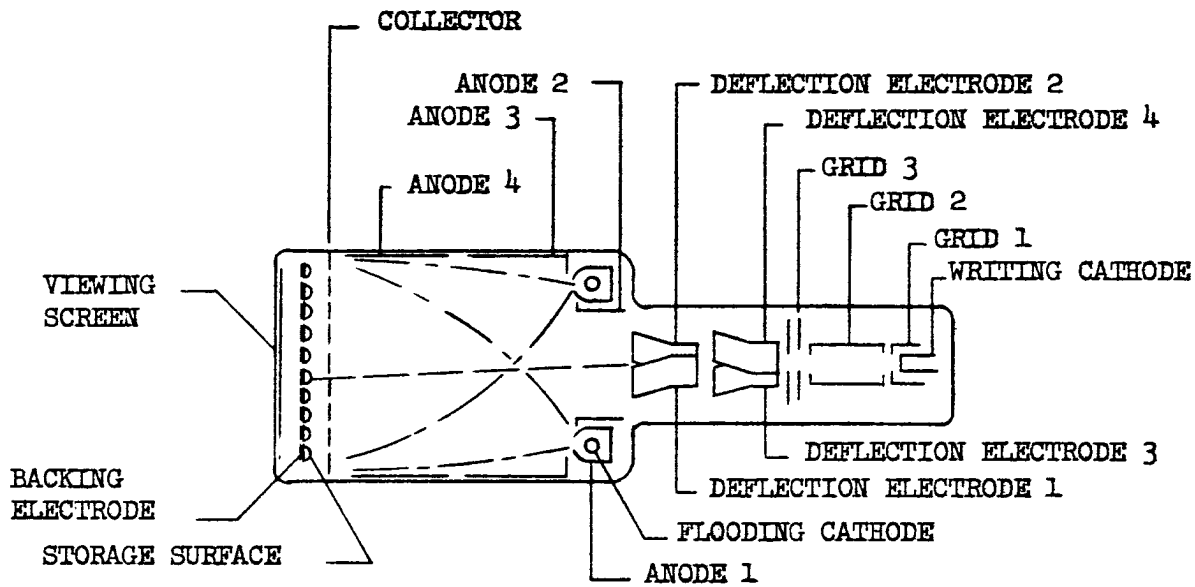

FIGURE 1 OPERATIONAL SCHEMATIC - FW-211

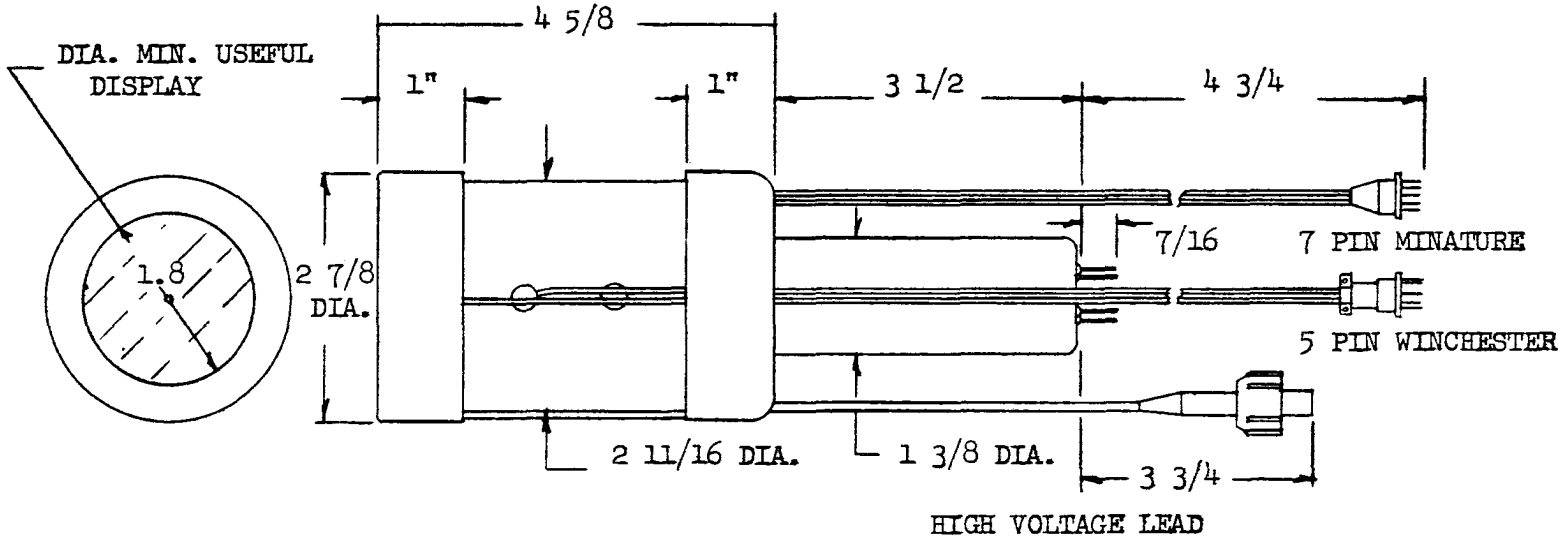

PIN	9 PIN BASE
1.	FLOOD GUN HEATER & ANODE 1
2.	FLOOD GUN HEATER
3.	GRID 2
4.	NO CONNECTION
5.	WRITING GUN HEATER & CATHODE
6.	WRITING GUN HEATER
7.	GRID 1
8.	GRID 3 (FOCUS)
9.	KEY PIN (CLIPPED)

PIN	7 PIN MINATURE
1.	FLOOD GUN CATHODE
2.	ANODE 2
3.	NO CONNECTION
4.	DEFLECTION ELECTRODE 1
5.	DEFLECTION ELECTRODE 2
6.	DEFLECTION ELECTRODE 3
7.	DEFLECTION ELECTRODE 4

PIN	5 PIN WINCHESTER
A.	NO CONNECTION
B.	ANODE 3
D.	COLLECTOR
E.	ANODE 4
H.	BACKING ELECTRODE

HIGH VOLTAGE MATES WITH AMPHENOL H.A. & H.V. TERMINAL ASSEMBLY NO. 832,608 or 834,333

FIGURE 2 DIMENSIONAL OUTLINE - FW-211

ITT
ELECTRON TUBE DEPARTMENT ■ COMPONENTS DIVISION
INTERNATIONAL TELEPHONE AND TELEGRAPH CORPORATION, CLIFTON, NEW JERSEY

FW-211

(Preliminary Specifications)

2-1/2-INCH IATRON*

STORAGE CATHODE-RAY TUBE WITH

ELECTROSTATIC FOCUS AND ELECTROSTATIC DEFLECTION

The FW-211 Iatron is a storage cathode-ray tube that produces a bright visual display for direct viewing of electrically stored information. It incorporates a cathode-ray gun for electrical signal input, an insulator mesh for beam charge storage, a flooding gun for viewing and erasing, and an aluminized phosphor viewing screen for visual output. The large undeflected flooding beam continuously excites the 1-7/8-inch viewing screen through the insulator mesh and is modulated in cross-section by the stored signal charge pattern.

Special features of this tube are bright daylight viewing of electrical signals by image amplification and the ability to write, store, and erase such information at will. A display exceeding 4000 foot-lamberts brightness is obtained at a viewing screen voltage of only 8.5 kv.

The tube fits within standard case dimensions for a 2-3/4-inch dial instrument, drawing MS33549. The tube, itself, meets the environmental requirements of MIL-E-5400.

Used as a panel-mounted indicator in aircraft, its fast writing and high deflection speed permits accurate and instantaneous presentation of electrical information. Since coaxial electron guns are used in the tube, there is no trapezoidal distortion of the scanning pattern, and the symmetrical envelope occupies minimum space.

Deflection circuits with adequate power to deflect the tube can be included in the space between the tube neck and indicator case, and connections to the deflecting electrodes are conveniently located in the shoulder stem.

* "IATRON" is a trademark of ITTL, a division of ITT.

DATA

GENERAL

	Writing Section	Flooding Section	
Heater			
Voltage (ac or dc)	6.3	6.3	volts
Current	0.6	1.2	amperes
Direct interelectrode capacitances (approx. without external shield)			
Grid #1 to all other electrodes	4.2		μμf
Cathode to all other electrodes	0.5		μμf
Deflecting electrode D1 to D2 front	3.7		μμf
Deflecting electrode D3 and D4 rear	3.3		μμf
D1 to all other electrodes	4.75		μμf
D2 to all other electrodes	4.0		μμf
D3 to all other electrodes	5.0		μμf
D4 to all other electrodes	4.5		μμf
Focusing method	electro-static		
Deflection method	electro-static		
Deflection sensitivity			
D_1 D_2	78-90		volts/inch/kv
D_3 D_4	74-86		volts/inch/kv
Phosphor	high-visual-efficiency type (aluminized)		
Fluorescence	yellow-green		
Minimum useful screen diameter	1.85		inches
Weight	14		ounces
Dimensions	Figure 1		
Basing	Figure 1		

MAXIMUM RATINGS

	Writing Section	Flooding Section	
Screen voltage		10	kilovolts
Backing electrode voltage (peak)		25	volts
Collector voltage		200	volts
Anode #4 voltage		100	volts
Anode #3 (collimating electrode) voltage		50	volts
Anode #2 (collimating electrode) voltage		50	volts
Anode #1 voltage		20	volts
Grid #3 (focusing electrode) voltage	300*		volts
Grid #2 voltage	50		volts
Grid #1 voltage	0*		volt
Cathode voltage	-1200	0 reference	volts
Peak voltage between grid #2 and any deflecting electrode	200		volts
Peak heater-cathode voltage			volts
Heater negative with respect to cathode	125	125	volts
Heater positive with respect to cathode	10	10	volts

OPERATING VALUES AND TYPICAL PERFORMANCE CHARACTERISTICS

	Writing Section	Flooding Section	
Screen voltage		8500	volts
Screen current (maximum)		.250	ma
Backing electrode			
Voltage (dc)		10	volts
Voltage (pulse)		10	volts
Collector voltage		125	volts
Anode #4 voltage		65	volts
Anode #3 voltage (adjust for collimation)		12	volts
Anode #2 voltage (adjust for collimation)		15	volts
Anode #1 voltage		12	volts
Grid #3 (adjust for focus) voltage	175 to 225*		volts
Grid #2 voltage	0		volts

* All voltages are with reference to the flooding gun cathode except those marked by an asterisk indicating reference to the writing gun cathode potential.

	Writing Section	Flooding Section	
Grid # 1 voltage	-100		volts
Deflecting electrodes			
Voltage (peak to peak) D1 - D2	75		volts
D3 - D4	72		volts
Voltage (average)	0		volt
Current[1]	100 (max)		μa
Cathode voltage	-900	0 reference	volts
Cathode current	1.5	16	ma

RANGE OF OPERATING ADJUSTMENTS

	Writing Section	Flooding Section	
Backing-electrode erasing voltage pulses[2]			
Voltages		3 - 10	volts
Frequency		5000 - 50	pps
Anode #3 voltage[3]		10 - 20	volts
Anode #2 voltage[3]		5 - 15	volts
Anode #1 voltage[3]		10 - 20	volts
Grid #3 voltage	15 to 30 percent of cathode voltage		
Grid #1 bias voltage	5 to 18 percent of cathode voltage		

1 Deflecting electrodes intercept flooding beam current reflected at the storage surface. The deflection circuits should therefore have low output resistance.

2 The specified range of pulse frequencies adjusts the viewing time from about 1 to 40 seconds using 0.5 microsecond pulses. The pulse amplitude adjusts the potential level to which the storage surface is erased.

3 Anode voltage adjustments are necessary to adjust collimation and spot size of the flooding beam.

PERFORMANCE CHARACTERISTICS

Insulator characteristic length	3 to 4	volts
Display differential cutoff[4]	10	percent
Erase time, maximum	4	milliseconds
Storage time[5]	20	sec
Viewing time[6], min.	30	sec
Viewing time extended[7], min.	120	sec
Writing speed[8], min.	20,000	in/sec
Resolution, 10 percent max brightness	100	raster lines/in
90 percent max brightness	35	raster lines/in

OPERATING PROCEDURES

Writing

The FW-211 writing gun produces a low-current high-density pencil electron beam which is electrostatically focused and electrostatically deflected. The writing spot is modulated and deflected in the usual manner for cathode-ray tubes and may even excite the viewing screen to a brightness of several foot-lamberts. This display is only incidental and its effect is negligible in contrast to the brightness of the true stored display.

Before striking the viewing screen the beam passes in sequence through the two fine-mesh metal screens: the collector and the backing electrode. These screens each intercept about one-half the current of the passing beam so that only about one-fourth of the initial current is finally transmitted to the viewing screen. An aluminized phosphor layer on the inside surface of the flat faceplate forms the viewing screen. The collector and backing electrode screens are stretched flat on thin mounting rings whose inside diameters are slightly larger than the useful diameter of the viewing screen; these three electrodes constitute a close-spaced assembly.

---

4 The saturated brightness display is erased with a train of high duty cycles (50 msec per sec.) erase pulses of amplitude just sufficient to cause some area of the display to reach cutoff. This amplitude is termed L. The erase pulse amplitude is increased until all of the display is cutoff. This amplitude is greater than by an amount D. The variation is specified by D/L x 100 percent.

5 The time required for the brightness to increase from cutoff to 50 percent of its saturation value. No erase pulses are applied during this time.

6 Under the test conditions with erase pulses applied to counteract ion charging of the storage surface, this is the time required for a signal written to saturation brightness anywhere in the display to decay to cutoff.

7 In this mode of operation the flood beam is turned on at a low duty cycle, but high frequency and the erase pulse amplitude and duty cycle are adjusted to just counterbalance the charging by positive ions. The saturation brightness level decreases from 4000 foot-lamberts to 400 foot-lamberts at 10 percent duty cycle.

8 Writing speed to 50 percent of saturation brightness with 40 volt video drive.

The backing electrode, adjacent to the viewing screen, derives its name from its primary purpose in the tube which is to support the charge-storage surface. The storage surface consists of a thin layer of insulator material coated on the mesh of the backing electrode on the side facing away from the viewing screen.

The portion of the writing beam which is intercepted by the storage surface causes secondary electron emission, and the collector by virtue of its proximity to the storage surface assures uniform collection of the secondary electrons. This secondary current is greater than the intercepted primary current and a net positive charge is, therefore, stored on every impacted area of the storage surface. Since the surface is a very good insulator, leak-off of the charge is negligible.

Wherever charges are stored during writing, the potential of the storage surface is shifted in the positive direction according to the relationship $dv = dq/C$. The voltage shift, dv, of the capacity, C, of the elemental area encompassed on the storage surface by the writing spot is proportional to the stored writing charge, dq. In this way a potential distribution corresponding to the beam-modulating voltage and positive with respect to the unscanned areas is established over the storage surface scanned by the writing beam.

The storage surface is essentially the control grid of a second gun called the flooding gun. The purpose of the writing beam is to distribute modulating voltages in predetermined spatial sequence over the storage surface to control the flooding beam.

Flooding

As its name implies, the flooding gun floods simultaneously the entire storage surface area with a high-current electron beam. The beam is stationary (not deflected). As the beam passes through the meshes of the storage surface, the individual rays of the beam defined by the meshes are modulated by the potentials stored on the surface surrounding each mesh opening.

The absolute value of the most positive potential stored on the storage surface is negative with respect to the flooding gun cathode. Consequently, flooding current cannot strike the surface but can penetrate the openings in the meshes if the potential level there is as high or higher than the cut-off voltage. The cathode is normally operated at zero voltage and the backing electrode at +10 volts. The combined effect of the backing electrode and the storage-surface voltages is to establish a potential level greater than zero in the mesh openings when the storage surface voltage is more positive then -4 volts. Within the control range current penetrates the mesh openings in proportion to the storage surface potential, continues on to strike the viewing screen, and

produces a visible output. As noted above, flooding beam cutoff occurs at a storage-surface voltage of -4 volts, and as will be explained zero voltage corresponds to maximum brightness output.

The storage surface potential can increase in the positive direction during writing until a peak value, positive with respect to the flooding-gun cathode, may be reached after prolonged writing. However, it cannot be stored at that level but is automatically and continuously erased by the flooding beam to cathode potential after writing has ceased. The most positive instantaneous potential of the storage surface never attains the amplitude required for runaway charging.

Erasing

Although flooding current does not strike the storage surface, positive ions resulting from collision of the electrons with residual gas molecules land uniformly on the storage surface causing it to charge slowly in the positive direction. This is frequently termed ion writing. In less than 1 minute, ions can write to the zero-volt level corresponding to maximum tube-output brightness.

Further increase of potential is checked by the landing of flooding beam electrons on the storage surface. Unlike the high-energy writing beam, the flooding beam has insufficient energy to cause appreciable secondary emission; therefore, its effect in landing is to charge the storage surface in the negative direction to cathode potential, zero voltage.

The process of using the flooding beam to charge the storage surface in the negative direction is termed erasing. In order to erase, the storage surface potential must first exceed zero volts and this condition is met by momentarily increasing the voltage of the backing electrode. A change in the backing electrode induces a like change on the storage surface. The electrical circuit is completed by the beam in the tube when the storage surface voltage rises above zero volts and erasing begins.

The normal operating voltage of the backing electrode is +10 volts and the storage surface potentials are assumed distributed in the control range from 0 to -4 volts. If the backing electrode is suddenly raised to +14 volts, the storage surface potentials likewise are raised 4 volts to the range 0 to +4 volts. Flooding electrons will land on the storage surface charging it to zero volts. Next, restoring the backing electrode to +10 volts reduces the storage surface to -4 volts and flooding beam cutoff.

The charging time required to erase from 0 to -4 volts is 3 milliseconds. Therefore, the FW-211 can be erased to cutoff by a 4-volt 3-millisecond erasing voltage pulse capacitively coupled to the backing electrode or by a train or narrower pulses as obtained from an electronic pulse generator.

Viewing Time

The FW-211 writes bright traces on a dark background. The dark background is established and maintained by erasing with a continuous train of voltage pulses applied to the backing electrode. To maintain a dark background it is necessary to prevent ion writing which, as already stated, can cause the viewing screen brightness to increase to maximum in a period of less than 1 minute. Assuming an ion-writing time of 40 seconds, this rate of increase referred to the storage surface is about 4/ 40 = 0.1 volt/second. If the rate of erasing, which causes the brightness to decrease, is greater than the rate of ion writing, then the net change will be in the direction of decreasing brightness. Thus the effect of ion writing is overcome and an increase in background brightness is prevented. Since the maximum rate of erasing is about 4/0.003 = 1000 volts/second (at least 10,000 times higher than the average rate required to overcome ion writing) this objective can be readily achieved.

The average rate of erasing is adjustable by pulse width, frequency, or both and provides the means of controlling viewing time. Viewing time is the time required to erase from maximum brightness (0-volt storage surface potential) to cutoff (-4 volts storage surface potential). With the rate of erasing adjusted to just greater than 0.1 volt/second, the time to erase to cutoff is maximum and is the condition for maximum viewing time.

A blocking oscillator is often used to generate the erasing pulses for applications requiring long viewing time because the frequency can be varied easily and narrow pulses are readily obtained. The approximate frequency and pulse-width requirements can be calculated. However, it should be remembered that the calculations are based on average rather than instantaneous charging rates and the ion-charging rate depends upon the residual gas pressure in the tubes which is subject to variation from tube to tube. Nevertheless the calculated values are useful design values except in the region of maximum viewing time where results depend predominantly upon ion currents.

As an example, the following calculation is inserted for determining the erasing pulse frequency required to achieve a viewing time of 15 seconds using a blocking oscillator which generates pulses 0.5 microsecond wide.

The duty cycle of the erasing pulses will be $f \cdot t$ seconds per second where f is the pulse frequency and t the pulse width. The rate of erasure is then $\frac{-4}{0.003} f \cdot t$ that is, the product of the maximum rate of erasure and the duty cycle. The effect of ion writing is cancelled by an erasure rate of 0.1 volt/second, the assumed ion-writing rate. Neglecting temporarily the effect of ion writing, the rate of erasure to erase the storage surface in 15 seconds is 4/15 or 0.27 volt/second. Therefore, equating $\frac{4}{0.003} f \cdot t$ to the

sum of these two erasure rates (0.1 + 0.27) volts/sec, $\frac{4}{0.003} f \cdot t = 0.37$; therefore if $t = 0.5 \times 10^{-6}$ sec, f = 550 pulses/sec.

Black Level

It will be obvious from the discussion of erasing that the potential level to which the storage surface will be erased depends upon the amplitude of the erasing pulses. If their amplitude is too low, the surface will not be erased to cutoff, and if too high, it may be erased to below cutoff. Either condition is usually not desirable. In the first case the background of the viewing screen will not be dark and in the second case writing speed will be reduced appreciably. Therefore, it is important to ascertain the correct erasing-pulse amplitude and to make circuit provisions to assure that it is correct for every pulse width and frequency contemplated.

The correct amplitude for erasing just to cutoff can be determined experimentally. With the writing beam biased off, allow the tube to ion write to equilibrium. Apply the erasing pulses after making certain that their amplitude is 3 volts or less. This amplitude is too low to erase the tube to cutoff and the viewing screen will be excited uniformly to low brightness by the flooding beam spot. However, to be certain that cutoff has not been reached it may be necessary to turn off the erasing pulses momentarily. Since the pulses contribute bursts of current to the screen which produce a dim glow even though the average storage surface potential may be at cutoff, this precaution is advisable to avoid erasing to below cutoff. Increase the amplitude and repeat the procedure until cutoff is just reached.

It will be found that the erasing pulse amplitude required is not the same for all values of erasing duty cycle and is higher at shorter duty cycles as used for long viewing time. An amplitude as high as 12 volts may be required when conditions are adjusted for maximum viewing time. Switching from this condition to the conditions for minimum viewing time without also reducing the pulse amplitude can cause the storage surface to be erased to a potential level three times greater than cutoff.

Composite Operation

Erasing-voltage pulses applied to the FW-211 maintain a dark background on the viewing screen. If the frequency of the pulses is greater than about 40 pps there will be no flicker. If now a raster of uniformly spaced lines is scanned with constant speed by the writing beam and modulation is applied to the control grid, a familiar cathode-ray tube display will be produced. The brightness will be proportional to the writing-beam intensity and the writing areas will decay in brightness to cutoff at a rate depending upon the viewing-time conditions used.

The maximum rate of charging of the storage surface by the writing beam is at least 1000 times greater than the maximum erasing rate and the instantaneous charge written by the writing beam is independent of the flooding and erasing operations being performed simultaneously in the tube.

When the writing beam is scanned with constant speed to describe a raster of uniformly spaced lines, the writing-charge density stored on the storage surface will be proportional to the writing beam intensity. However, this may not be the case for many other types of scanning patterns or where the scanning speed is not constant. It is the writing charge per writing-spot area per scan period which determines the brightness of the written signals. Since the writing charge depends upon charging time as well as upon charging current, any departure from uniform charging time at any area of the storage surface during the scanning period destroys the proportionality between output brightness and writing beam intensity.

In many instances it is possible to use video equalization in the video amplifier to produce a stored writing charge density which is proportional to the video signal amplitude at the input to the amplifier. For example, video equalization can be used where the scanning path is radially outward about a common point (PPI radar display). In this scanning pattern, the average writing charge density is greatest at the start of the scan where the paths converge. The video equalization causes the output video amplitude to increase as a function of distance from the common center point of the pattern.

OPERATING PROCEDURE

Electrode Functions

There are three sections to the FW-211, named according to their functions. These are the writing, flooding, and imaging sections. The functions of the backing electrode and viewing screen comprising the imaging section have already been described, and in further discussions these are considered part of the flooding section.

The writing section contains only the writing gun which is of a type commonly used in cathode-ray tubes and is operated in the same way. Complete operating data is given under Operating Values and Typical Performance Characteristics sections.

A conductive coating on the inner wall of the bulb is divided into two separate bands whose essential purpose is to collimate the flooding beam. Uniform collimation is normally obtained by adjusting the voltages on anodes 2 and 3.

Flooding-Beam Focusing

The FW-211 must be operated in a shield to prevent deflection of the flooding beam by magnetic fields. Failure to provide adequate magnetic shielding can cause shading of brightness across the viewing screen diameter.

To collimate the flooding beam, apply typical operating voltages as specified under Operating Values and Typical Performance Characteristics, heeding the warning and precautions given later in this Operating Procedure. Bias the writing gun to cutoff and do not apply the backing-electrode erasing-voltage pulses. Allow the tube to ion write to full brightness, then adjust the voltage of anode No. 2 until the flooded area just fills the useful viewing diameter on the viewing screen. Next, adjust the anode No. 3 voltage until the brightness appears most uniform over the viewing screen. There is overlapping of control by the two anodes and it may be necessary to readjust the voltage of one after adjusting the other.

Do not permit the tube to remain in this maximum-brightness condition longer than necessary to make the above coarse adjustments since this may overheat the viewing screen and reduce its efficiency. Apply low-amplitude erasing pulses to the backing electrode and slowly increase their amplitude until the tube is just at cutoff (see section on black level). With scanning-pattern deflecting voltages applied, reduce the writing gun bias and focus the writing beam. Using an unmodulated beam, write to a brightness just above cutoff. Readjust slightly the voltages of anodes 2 and 3 until the pattern appesrs to be at equal brightness along any diameter.

Power Supply Requirements

The flooding-gun cathode carries the largest current of the beam-forming electrodes of the tube and for the least dissipation of power in voltage-dropping resistors in the power supply it is usually operated connected to ground.

The writing gun voltages are all negative with respect to the flooding gun cathode. They can be tapped from a bleeder across a 1200-volt power supply in the usual manner for cathode-ray tube guns.

The final deflecting electrodes, D1 and D2, can collect flooding current which has been reflected at the storage surface. The total current collected by either electrode when it swings positive during the deflection cycle will not exceed 100 microamperes. The circuit resistance of the final deflecting electrodes should be low enough to prevent

distortion of the scanning pattern by the loading of the electrodes with the intercepted flooding current.

Any voltage variations of the backing electrode are capacitively coupled to the storage surface which acts as the control grid for the flooding beam. Therefore, the same circuit precautions as regards ripple and shielding should be taken in operating the backing electrode as would be taken in operating any control grid. The backing electrode does not intercept current directly, but it does conduct all storage-surface charging currents and its resistance should, therefore, not exceed 10,000 ohms.

The regulation of the viewing-screen high voltage is not critical. Changes of screen voltage of less than approximately 10 percent do not cause a significant change in any of the electrode currents or tube characteristics. The circuit resistance should be at least 1 megohm and the voltage at no load should not exceed 10 kilovolts.

Special Precautions

Observe maximum ratings to avoid possible damage to the tube. In particular, the viewing-screen voltage should be limited so as never to exceed 10 kilovolts.

The full voltage should not be applied to the viewing screen instantaneously. An ordinary R-C filter at the output of the power supply provides adequate assurance that the voltage build-up will not be too abrupt. The minimum resistance of the high-voltage lead should be 1 megohm.

Repeated bombardment with a high-current focused writing beam on a small area of the storage surface can burn a dark image into the display which may remain for several hours or even permanently. Therefore, deflection voltages should be applied before operating the writing beam.

Attention is again called to the fact that the storage surface can be erased to far below cutoff by a high-amplitude voltage pulse applied to the backing electrode. A large transient voltage on that electrode can prevent normal writing for several minutes thereafter.

Deflecting electrodes D1 and D2 can act as mirror electrodes to reflect flooding current. Flooding current reflected at the storage surface, returning down the tube, can be reflected by the deflection electrodes at the instant when their potential passes through zero voltage. This re-reflected and concentrated current can then traverse the length of the tube for the third time causing a bright region to appear in the display and may even erase that area if its arrival coincides in time with an erasing pulse. Reflection

of current by the deflecting electrodes is in synchronism with the deflecting voltage applied to them so that brightening of the affected area of the display occurs at the same frequency. To avoid this disturbance the higher-frequency deflection voltage should be applied to the offending deflecting electrodes D1 and D2. This reduces the duration of the transient current pulse to the extent that its effects are negligible.

WARNING

The metal ring which encircles the faceplate of the FW-211 is at viewing-screen potential. Although encapsulated in plastic and adequately insulated from metal ground, to avoid possible shock be certain the high voltage is turned off before touching the tube.

Connectors

The 7-pin miniature cable connectors may be purchased from:

Cannon Electric Co.
3208 Humboldt Street
Los Angeles, California
MR-7-11 and MR-7-15

Alden Products Co.
Brockton, Mass.
207 MINC-7 pin

The high voltage cable No. 8101M mates with No. 8101F manufactured by: Alden Products Co., 146 N. Main Street, Brockton, Mass.

The Winchester connector (M5P-LSH19CS) is manufactured by: Winchester Electronics, Inc., Willard Rd., Norwalk, Conn.

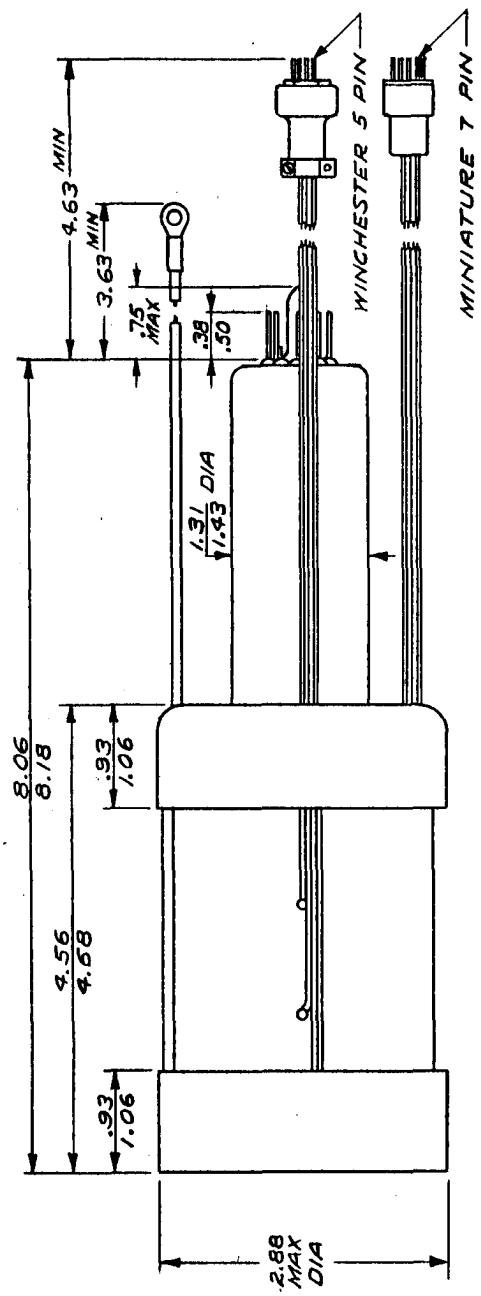

9 PIN BASE

PIN
1 FLOOD GUN HEATER & ANODE #1
2 FLOOD GUN HEATER
3 GRID #2
4 NO CONNECTION
5 WRITING GUN HEATER & CATHODE
6 WRITING GUN HEATER
7 GRID #1
8 GRID #3
9 N.C. SHORT INDEX PIN

5 PIN WINCHESTER

PIN
D BACKING ELECTRODE (GREEN)
E COLLECTOR (RED)
A ANODE #3 (BLUE)
B ANODE #4 (VIOLET)
H NO CONNECTION

7 PIN MINIATURE

PIN
1 FLOOD GUN CATHODE (YELLOW)
2 ANODE #2 (RED)
3 NO CONNECTION
4 DEFLECTING ELECTRODE #1 (GREEN)
5 DEFLECTING ELECTRODE #2 (ORANGE)
6 DEFLECTING ELECTRODE #3 (VIOLET)
7 DEFLECTING ELECTRODE #4 (BLUE)

Figure 1 FW-211 Outline Dimensions and Basing

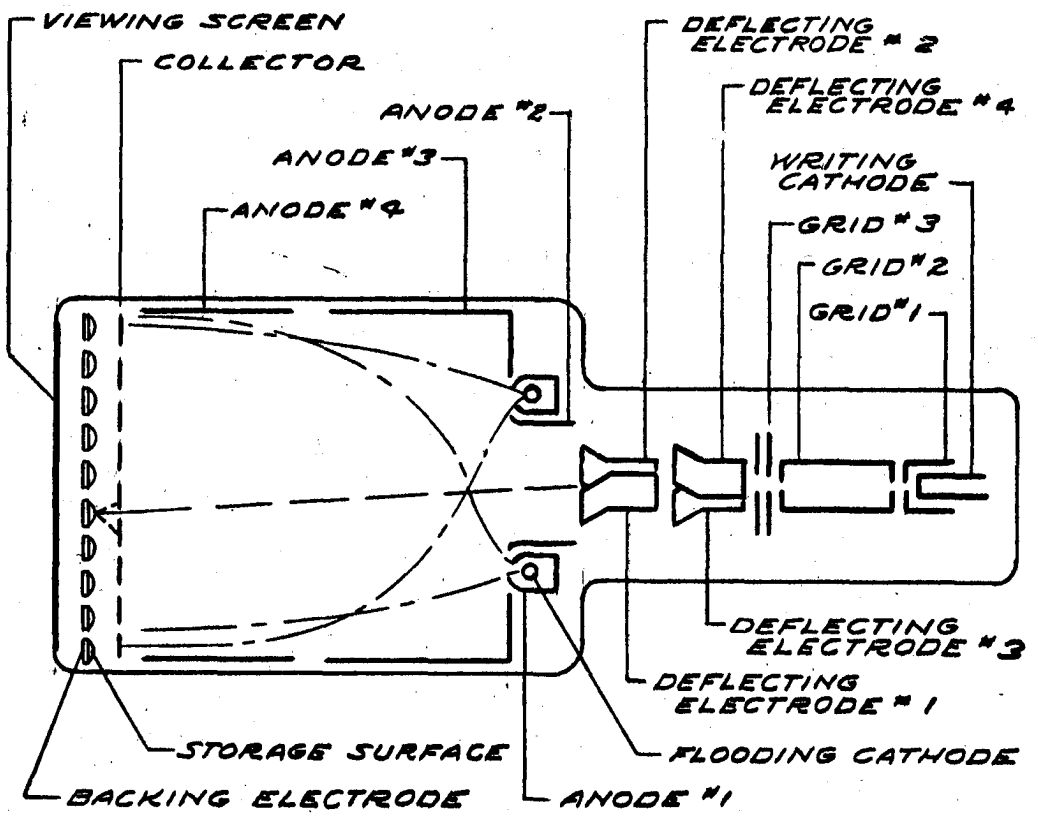

Figure 2 FW-211 Operational Schematic