ITT INDUSTRIAL LABORATORIES

APPLICATION NOTES

Barrier-Grid Storage Cathode-Ray Tube

Type FW-202

BACKGROUND CANCELLATION FOR AREA MTI — BINARY INFORMATION STORAGE, RANDOM ACCESS — IMAGE STORAGE — SCAN CONVERSION

The FW-202, 5-inch Barrier-Grid Storage Tube possesses two important properties: first, if a pattern of repetitive signals is applied to the metallic target substrate in synchronism with the scanning electron beam, no signal will appear at the output of the tube after a few cycles, and second, excellent registration is obtained between the writing and reading patterns. If a moving signal is present in this pattern of repetitive signals (i.e., the background pattern) only the moving signal will appear in the output. For example, if a PPI radar pattern containing appreciable clutter is applied to the input of the tube, only moving objects in the area will be present as signals at the output of the device. The second property is most useful for binary information storage, random access operation, as in the high-speed working store of a computer where very accurate registration is required from write to read. The tube can also be used for signal-to-noise improvement because of the integrating property of the storage surface and the fact that the signal builds up at a faster rate than the random noise background. In addition, the device can be used for storing images and for scan conversion applications.

COMPONENTS and INSTRUMENTATION Laboratory
Fort Wayne, Indiana

A DIVISION OF INTERNATIONAL TELEPHONE AND TELEGRAPH CORPORATION

PRINCIPLES OF OPERATION

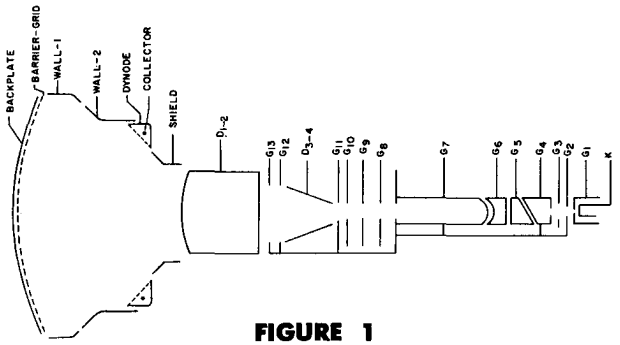

FIGURE 1

The tube is an electrical input, electrical output device. The tube utilizes a single, electrostatically focused and deflected gun which is used for writing in and reading out the information on a solid, spherically curved target. The target consists of a metal bowl with a thin dielectric layer fused to its concave side and a curved, fine-mesh screen in turn fused to the dielectric surface. The center of deflection of the gun coincides with the center of curvature of the target assembly. A collector electrode and an associated electron optical system for focusing the signal electrons from the target onto the collector electrode are positioned between the gun and target. The tube is shown schematically in Figure 1.

THE STORAGE MECHANISM

The target of the Barrier-Grid Storage Tube consists essentially of an array of elemental capacitors which are charged or discharged by the action of the electron beam. The beam is operated at a velocity such that the secondary emission ratio of the dielectric surface is greater than unity. The secondaries leave the surface with a velocity distribution which is essentially Maxwellian as shown in Figure 2. A cross-sectional view of a target element is shown in Figure 3 with the charging capacitances indicated. If the storage surface is at barrier-grid potential and the target is scanned by the beam, all of the secondary electrons generated at the surface leave the target and go to the collector. More electrons leave than arrive so that a net positive charge is established on the storage surface. The secondaries now encounter a decelerating field which must be traversed before they can exit from the barrier-grid aperture. This decelerating field *forces the electrons having inadequate energy to transverse it to return to the storage surface within the aperture in which they are* generated because the barrier grid is fused to the storage surface. This is a feature unique to the FW-202. As more and more secondaries are produced by the bombarding beam the potential of the storage surface becomes increasingly positive until the number of secondaries passing out of the barrier-grid apertures to the collector just equals the number of bombarding electrons arriving at the storage surface. The potential of the storage surface at this point is the equilibrium potential. If the storage surface potential becomes more positive than this value fewer electrons leave than arrive, so that a net negative charge is accumulated on the storage surface and the potential shifts in the negative direction until the equilibrium level is again reached. The equilibrium potential, Vo, is indicated in Figure 2. The area under the curve to the right of this point represents escaping secondary current and just equals the incident beam current.

Writing is accomplished by shifting the backplate either positive or negative and bombarding the target with the electron beam. Using Figure 3, writing may be accomplished by applying a –40 volt pulse to the backplate (the barrier grid is normally grounded). This

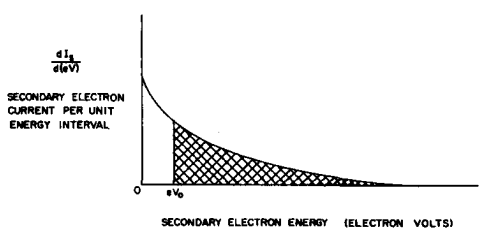

FIGURE 2

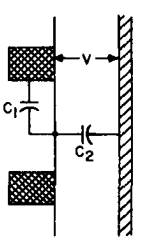

FIGURE 3

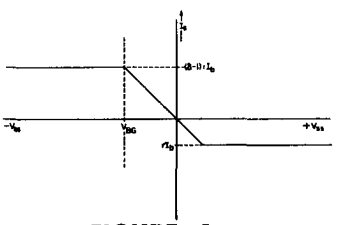

FIGURE 4

shifts the storage surface negative by an amount ΔV determined by the relative values of C1 and C2, from the equilibrium level which in turn is some 4 volts positive with respect to the barrier grid. The secondaries generated by the writing beam bombarding the storage surface now encounter an accelerating field and all secondaries escape to the collector until the storage potential reaches that of the barrier grid. The escaping secondaries again establish the decelerating field as described above and fewer and fewer secondaries escape to the collector until the equilibrium level is again reached. The instantaneous charging or signal current as a function of a negative storage surface potential is shown in the left side of Figure 4. The maximum value represents the secondary current comprised of electrons having energies less than eVo of Figure 2, i.e., the total secondary current generated by the beam at the dielectric surface less the primary bombarding beam current arriving at the surface. Actually, the total beam current does not arrive at the dielectric surface since a certain portion is intercepted by the barrier-grid mesh. If the transmission ratio of the mesh is r, then the beam current arriving at the dielectric surface is rIb. The maximum signal is then $(\delta - 1)$ rIb.

During saturation writing the storage surface is charged ΔV volts positive or to the equilibrium level. Prior to reading, the backplate is returned 40 volts to barrier-grid potential. As a result of the charging during writing, the storage surface is now ΔV volts positive with respect to the equilibrium level. Reading consists of discharging the storage surface to the equilibrium level. The instantaneous *discharging or signal current as a function of the positive storage surface potential is shown in the right side of Figure 4. The maximum* current level is produced by those electrons having energies greater than eVo of Figure 2 and is numerically equal to the bombarding current reaching the dielectric surface or rIb.

It is also possible to write with the backplate positive; the above sequence is then reversed and reading occurs with the storage surface negative with respect to the equilibrium level. Actual signal current characteristics as a function of backplate potential are shown in Figure 5.

The video can be applied to the control grid of the electron gun or the backplate. The output can be obtained from either the collector or backplate. Coaxial leads are provided to both output signal electrodes.

THE ELECTRON GUN

The electron gun is a unique gun designed to deliver a relatively high current into a small spot and to permit this small spot size to be maintained constant while the beam is deflected through a maximum angle of 60 degrees. The high current combined with small, uniform spot size permits the simultaneous achievement of high charging rates, high resolution, and high output signal levels.

The electron beam, after passing through the G1 aperture goes through the crossover and into the condenser lens formed by G2, G3, and G4 where it is condensed onto a small aperture in G4 by G3. Electrodes G4, G5, G6, and G7 form a drift tube which permits the beam passing through the G4 aperture to expand about 20 diameters before entering the main focusing lens. Electrodes G5 and G6 form crossed prismatic lenses with G4 and G7. Focusing at the center of the tube is accomplished through adjustment of quiescent potentials applied to lens electrodes G8, G9 and G10. The main dynamic focusing voltages are applied to G8 and G10 which are aligned with the rear and front deflection plates respectively. A dynamic correction is also required for G8. The crossed prismatic lenses center the beam in the exit aperture of G7.

In setting up the tube, G3, G5, and G6 are adjusted until maximum beam current is achieved. The effect of G3 on the beam current is shown in Figure 6. A control grid characteristic with G3 set for maximum current is shown in Figure 7.

ELECTRICAL DATA

Target Section[1]
- Barrier grid — backplate capacitance ..... 6500 $\mu\mu f$
- Barrier grid ..... 0 volts
- Backplate ..... ±50 volts

Collector Section
- Collector capacitance ..... 17 $\mu\mu f$
- Wall No. 1 ..... ±25 volts
- Wall No. 2 ..... ±25 volts
- Collector ..... +180 volts
- Shield ..... –90 to –200 volts
- Dynode ..... +90 volts

Barrier grid is connected internally to the metal seal rings at front of tube and thus is connected to the outside conductor of the coax; the backplate being connected to the center conductor of the coax.

Writing - Reading Gun [2] [3]
- Heater ..... 6.3 volts, 0.6 ampere
- K ..... –1500 volts
- G1 ..... –1600 volts max.
- G2, 4, 7, 11, 12, 13 ..... 0 volts
- G3 ..... –1100 to –1500 volts
- G5 ..... ±250 volts
- G6 ..... ±250 volts
- G8, G9, G10 ..... –700 to –900 volts
- Mean deflection potential ..... 0 volts
- Deflection factor:
  - D1 - D2 ..... 700 volts peak to peak,
  - D3 - D4 ..... push-pull deflection for diametral scan.

[2] Adjust G3, G5, G6 for Ib maximum at zero bias.
[3] Adjust G8, G9, and G10 for minimum circular spot size.

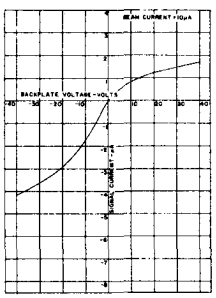

FIGURE 5

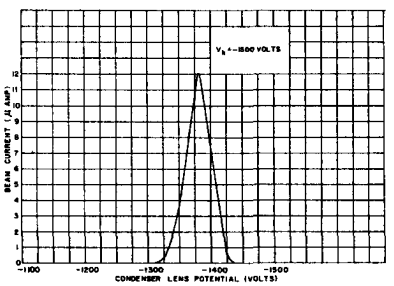

FIGURE 6

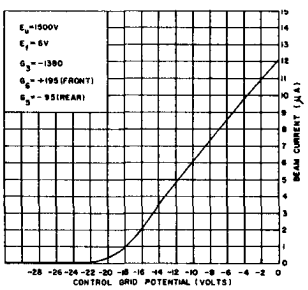

FIGURE 7

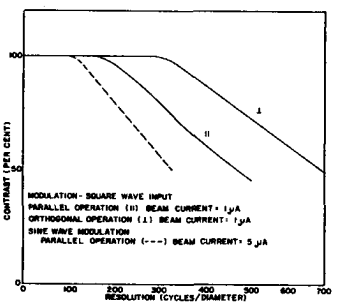

FIGURE 8

PERFORMANCE DATA

Resolution	Scanning: 400 cycles/diameter square wave modulation, parallel write-read at 50 percent contrast (1200 TV lines/diameter at 50 percent contrast for orthogonal write-read). See Figure 8. Step deflected (computer) — Shrinking raster 58,000 (240 bits by 240 bits) at 100 percent contrast.
Shading	Collector readout: negligible.
Cancellation ratio	Collector readout: 20 to 1.
Charging factor	100 μsec/diametral scan to 80 percent of saturation level for Vp = –40 volts step scan: Vp = +40 volts, 1.5 μsec to 60 percent of saturation.
Discharge factor	100 μsec diametral scan, second read less than 70 percent of first read. Step scan — second read less than 10 percent first read for 3 μsec read.
Integration or gray scale	Shall be possible to distinguish 15 separate writing levels in the output signal.
Readaround ratio	16 readarounds with an inscribed raster of 120 bits by 120 bits at 50 percent contrast.

OUTLINE DRAWING—CONNECTIONS

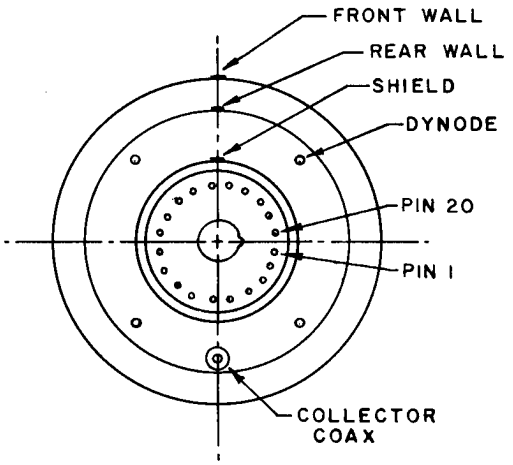

BASE PIN CONNECTIONS JEDEC 820 120

PIN 1. HEATER
2. CATHODE
3. GRID #1
4. NO CONNECTION
5. GRID #8 (FOCUS #1)
6. GRID #9 (FOCUS #2)
7. GRID #5 (CENTER #1)
8. GRID #6 (CENTER #2)
9 NO CONNECTION
10. DEFLECTION ELECTRODE #3
11. DEFLECTION ELECTRODE #4
12. INTERNAL CONNECTION
13. DEFLECTION ELECTRODE #1
14. DEFLECTION ELECTRODE #2
15. GRID #2, 4, 7, 11, 12, & 13
16. NO CONNECTION
17. GRID #10 (FOCUS #3)
18. GRID #3
19. NO CONNECTION
20. HEATER

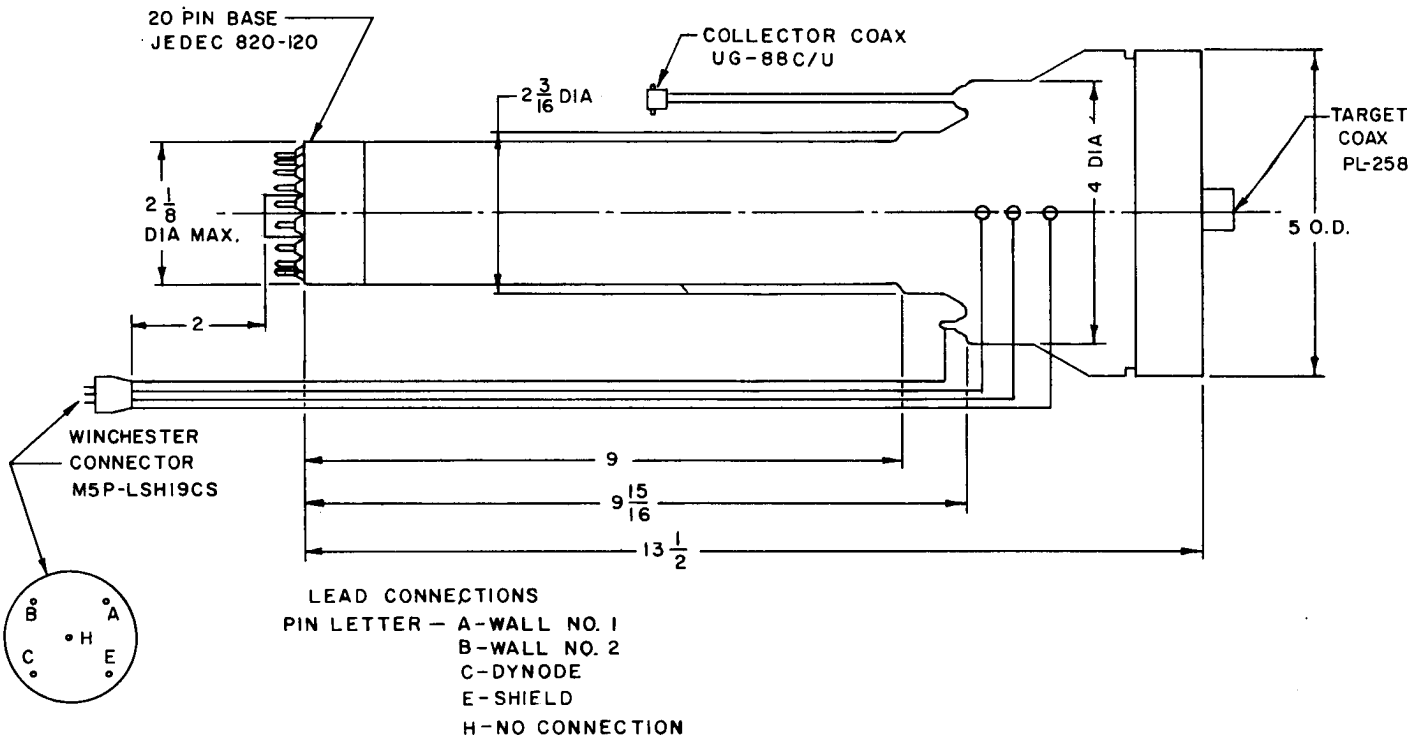

LEAD CONNECTIONS
PIN LETTER — A-WALL NO. 1
B-WALL NO. 2
C-DYNODE
E-SHIELD
H-NO CONNECTION

The Components and Instrumentation Laboratory developments range from basic research to pilot production, with contributions to the electronics industry over the years being varied and impressive. Other recent developments include the following:

Barrier-grid storage tubes
Pulsed infrared storage tubes
Transparent phosphors
Infrared detectors
Stored nitrogen containers
AN/AAG-5 IR Search Set
AN/AAR-21 IR Search-Track Set

Direct view storage tubes
High current multipliers
Multialkali cathodes
Mosaic infrared cells
Switching tubes
Telephone line TV systems
Underwater TV systems
Advanced display systems

Image converter, 7177
Shutter tube, 6839
Coaxial phototubes
Cryostats
Flaw inspectors
Storage tube radar indicators
Storage tube IR indicators

Address inquiries to: Director, Components and Instrumentation Laboratory, ITT Industrial Laboratories
3700 E. Pontiac Street, Fort Wayne, Indiana **Telephone Eastbrook 7571**