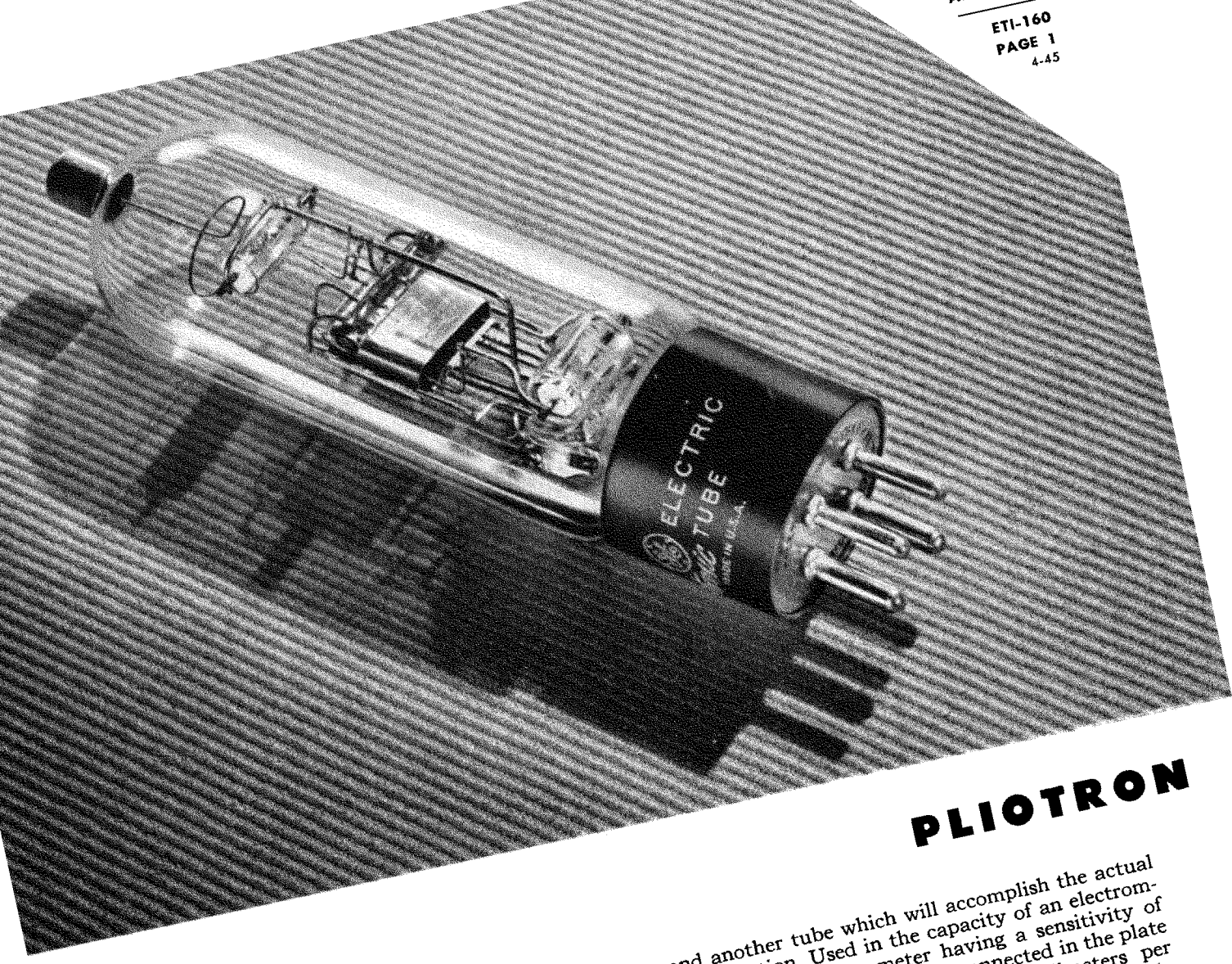

PLIOTRON

DESCRIPTION

The FP-54 space-charge-grid tube is designed to have a very high input resistance and a very low grid current. It is designed particularly for amplification of direct currents smaller than about 10^{-9} amperes and has been found capable of measuring currents as small as 5×10^{-18} amperes.

This tube will give the maximum benefits when used to measure very small currents or voltages in very high-resistance circuits. Using a single tube with an input resistor of 10^{10} ohms resistance, the current amplification factor will be 250,000. Since the tube has a voltage amplification factor of less than unity, it should be used in this capacity only as a coupling tube between a high-resistance circuit and another tube which will accomplish the actual amplification. Used in the capacity of an electrometer, with a galvanometer having a sensitivity of 10^{-10} amperes per millimeter connected in the plate circuit, a sensitivity of 250,000 millimeters per volt will be obtained. The FP-54 can be easily installed and operated in a suitable circuit to detect currents as low as 10^{-17} amperes—about sixty electrons per second.

The FP-54 is a convenient and sturdy substitute for a sensitive galvanometer or electrometer in any standard circuit involving the measurement and detection of small currents.

GENERAL ELECTRIC

TECHNICAL INFORMATION

These data are for reference only. For design information refer to specifications.

GENERAL CHARACTERISTICS

Number of electrodes	4	
Electrical		
Filament voltage	2.5	volts
Filament current	0.09	ampere
Approximate direct interelectrode capacitance		
Control-grid-to-plate-to-space-charge-grid	6	micromicrofarads
Mechanical		
Base		medium 4-prong bayonet
Net weight, approx.	3	ounces
Shipping weight, approx.	6	pounds

TYPICAL OPERATING CONDITIONS

Normal operating voltages		
Plate	6	volts
Control grid	−4	volts
Space-charge grid	4	volts
Average characteristics values at normal operating conditions		
Plate current	60	microamperes
Control-grid current, approx.	10^{-15}	amperes
Input resistance, approx.	10^{16}	ohms
Amplification factor	0.9	
Plate resistance	45,000	ohms
Control-grid plate transconductance	20	micromhos

INSTALLATION

The FP-54 is designed for use with a standard, 0.640-inch pin-circle diameter, four-contact socket. A spring connector should be used for connecting to the top cap. If an attempt is made to solder to the cap, the cement may loosen, causing the lead through the glass to break off. This pliotron may be mounted in any position. The tube must not be subjected to excessive vibration or sudden shock.

For measurements of very small currents, a steady high-resistance unit is required to obtain sufficient voltage drop to operate the tube. A sensitive galvanometer, with an arrangement for balancing out the initial plate current, is required for measurement of plate-current changes.

The surface of the bulb must be kept free from all sources of surface leakage. Remove all traces of foreign matter which might form a conducting path from the control grid to ground.

The air in contact with the bulb must be kept free from moisture. A drier, such as phosphorous pentoxide, placed in the compartment with the tube is satisfactory.

Because of the high leakage resistance of the tube, any change in the total capacitance of the control-grid circuit to ground, such as might be caused by stray capacitive effects, will cause a marked change in the potential of the control grid. Appreciable time will be required for the potential to return to its original value. Since the magnitudes of the plate current deflections measured are quite small, any stray magnetic effects picked up in the associated wiring will cause appreciable deflection. Because of the reasons mentioned above, tube apparatus, including all wiring, meters, controls, and batteries, must be built into a shielded compartment or operated in a shielded room. The tube must also be shielded from air. A metal box will serve both as a shield from air and as an electrostatic shield. If there are large magnetic fields in the vicinity, the shielding must be of iron.

The FP-54 has been designed to minimize all sources of leakage and great care must be taken in its installation not to introduce external sources of leakage. The grid lead and all connections in the grid circuit above ground should be run as directly as possible without any insulators. Should it be necessary to run a lead through the shield, a piece of quartz tubing will make a satisfactory bushing.

Since very small changes in current are measured, the supply voltage must be as nearly constant as possible. Storage batteries of large capacity have proved to be the best source of voltage. Special care must be taken to see that all connections are secure and that controls, such as rheostats and switches, make positive contact and are not subjected to variation by vibration or jar.

OPERATION

Careful handling and conservative operation of this tube will be amply repaid by the longer and more uniform tube life which will be obtained.

During handling, the surface of the bulb will pick up charges, a part of which will leak off through the control grid circuit, appreciably increasing the grid current. Measurements should not be made at any operating conditions without first allowing the tube to run at these conditions for some time. Half an hour will usually suffice for most of these charges to leak off. It may be found advantageous to coat the outside of the bulb with some conductor, such as aquadag, to within an inch or two of the control grid connection. Connecting this con-

ductor to a source of potential equal to that of the grid will facilitate dissipation of the charges on the bulb.

All of the recommended voltages can be varied somewhat without injury to the tube. Operating at higher voltages, however, will tend to increase the grid current. Operating at lower voltages, especially on the filament, will tend to decrease it. It is not advisable to operate with more than 2.5 volts on the filament, more than 6 volts on the space-charge grid, more than 10 volts on the plate, or with less than 3 volts negative on the control grid. When operating with a high-resistance grid leak, if a high input resistance is to be maintained, sufficient grid bias must be applied so that the voltage drop through the grid leak, caused by the grid current, does not cause the actual grid voltage to fall below the recommended minimum value. If sufficient grid bias is not applied the tube will bias itself in the region where the input resistance is low. At the point where the grid current passes through zero in changing from a negative to a positive value, the input resistance is approximately 10^{14} ohms.

In operation, the changes in grid voltage are measured by the changes in plate current. As mentioned above, this may be accomplished with a sensitive galvanometer with the initial plate current balanced out. With this method it is possible to obtain an over-all sensitivity of 250,000 millimeters per volt. Another method is to use an amplifying tube with a high mutual conductance in place of the galvanometer. The plate current of the amplifying tube can then be measured with a less sensitive galvanometer. If the supply voltages are held constant the plate current will remain constant with no tendency to drift.

The following circuits are suggested for use with the FP-54. With slight modifications these circuits may be adapted to any ordinary measurements.

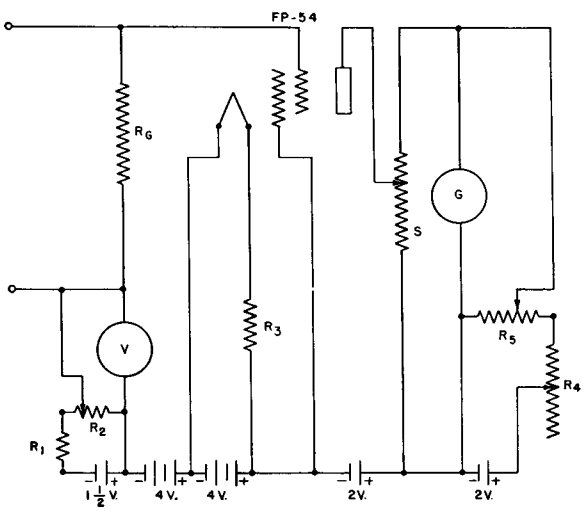

R_1 = 1000-ohm Resistor
R_2 = 400-ohm Potentiometer
R_3 = 17-ohm Resistor
R_4 = 400-ohm Rheostat
R_5 = 10,000-ohm Potentiometer
S = 10,000-ohm Potentiometer
V = 0-200-mv Millivoltmeter
G = Sensitive Galvanometer
R_g = 10^7- to 10^{12}-ohm Resistor

K-8639665 Fig. 1—One-tube Circuit 8-18-44

I. Simple one-tube circuit

The simple circuit shown in Fig. 1 is recommended for measurements of currents as small as 10^{-14} amperes. It requires only a 12-volt storage battery and a 1.5-volt dry cell.

The method of operation is as follows:

With the filament voltage set at its rated value (2.5 volts) and V reading zero, the galvanometer is made to read zero by adjusting R_4 and R_5. The input current, i, will then produce a change in grid potential, e, equal to $R_g i$ and the change in plate current will cause a deflection of the galvanometer. By adjusting R_2 the galvanometer is brought back to zero. The meter V then reads the value of e, from which i is computed if R_g is known. The sensitivity of the amplifier depends upon the value of R_g and on the sensitivity of the galvanometer. Thus, if g_m is the grid-plate transconductance of the tube

$$g_m = \frac{di_p}{deg} = \frac{I_G}{R_g i} = \frac{kd}{R_g i}$$

where k is the galvanometer sensitivity, i_G the galvanometer current, and d the galvanometer deflection for the input current i.

For the FP-54, g_m is equal to about 20 microamperes per volt. Hence, for example, if $k = 10^{-9}$ ampere per millimeter, $r_g = 10^{10}$ ohms, then d will be 1 millimeter, for $i = 5 \times 10^{-15}$ amperes. The current amplification factor is

$$A = \frac{i_G}{i} = R_g g_m$$

and hence in this example $A = 20 \times 10^4$.

II. Two-tube balanced circuit

For currents smaller than 10^{-14} amperes, the circuit shown in Fig. 2 is recommended. The circuit is balanced by adjusting R_4, R_7, and R_8 so that variations in plate supply voltage will cause no

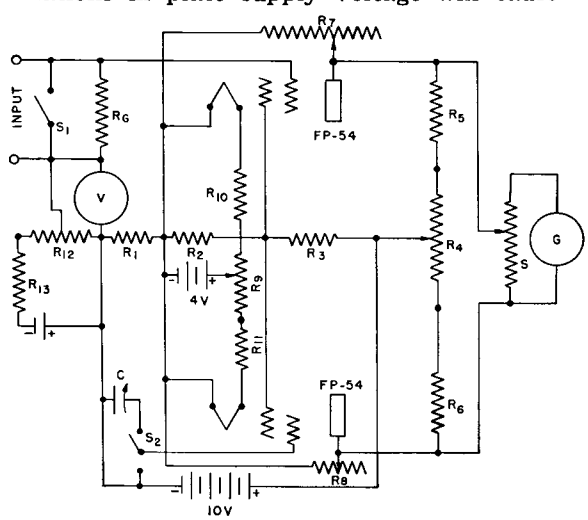

R_1 = 3000-ohm Resistor
R_2 = 5000-ohm Resistor
R_3 = 2000-ohm Resistor
R_4 = 10,000-ohm Potentiometer
R_5 & R_6 = 5000-ohm Resistors
R_7 & R_8 = 0.1—10-megohm Resistors
R_g = 10^{10}- to 10^{14}-ohm Resistor
C = 15-$\mu\mu f$ Quartz-insulated Variable Condenser
S_1 & S_2 = Quartz—or Air-insulated Switches
G = Sensitive Galvanometer
R_9 = 10-ohm Potentiometer
R_{10} & R_{11} = 15-ohm Resistor
R_{12} = 400-ohm Potentiometer
R_{13} = 1000-ohm Resistor
S = 10,000-ohm Potentiometer
V = 0-200-mv Millivoltmeter

K-8639664 Fig. 2—Two-tube balanced Circuit 8-18-44

change in the galvanometer reading. The effect of R_7 and R_8 is to make the change in current with plate supply voltage in the two circuits equal. An adjustment of R_9 can be found which will make the galvanometer reading independent of filament supply voltage as well. The circuit is then extremely stable and a galvanometer with a sensitivity of 10^{-10} ampere/millimeter may be used, together with a grid resistance of 10^{11} ohms. The ideal sensitivity then will be about 5×10^{-17} amperes per millimeter but, because of the bridge arrangement, the real sensitivity will be half as great, or 10^{-16} ampere/millimeter. The actual amplification factor will be about 10^6.

A still greater sensitivity may be obtained by floating the two control grids—that is, by making R_g infinite and switching S_2 to the condenser C. The potential of each grid will then slowly reduce due to the residual grid current of 10^{-15} amperes. If they reduce at the same rate the galvanometer will still read zero. They may be made to reduce at the same rate by adjustment of the variable 15 micromicrofarad condenser.

The input current i will now cause the potential of the grid of tube *No. 1* to reduce faster, and this will produce a steady drift of the galvanometer, which may be timed with a stop watch. (The circuit is thus simply a vacuum tube electrometer.) The current is then determined from

$$\frac{di_G}{dt} = g_m \frac{de_g}{dt} = g_m \frac{i}{C}$$

where C is the grid capacitance, and is about 6 micromicrofarads for the FP-54. For a galvanometer sensitivity of 10^{-10} amperes per millimeter, a drift of 1 millimeter per second will correspond to an input current of

$$i = \frac{10^{-10} \times 6 \times 10^{-12}}{20 \times 10^{-0}} = 3 \times 10^{-17} \text{ amp}$$

In actual practice such a circuit has been found capable of detecting currents of 5×10^{-18} amperes (about 30 electrons per second).

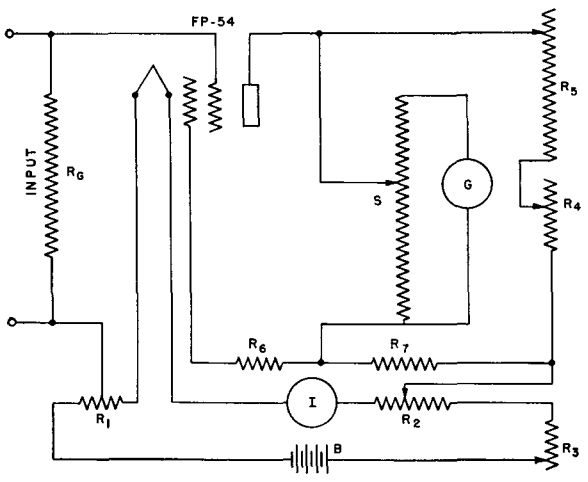

R_1 & R_2 = 50-ohm Potentiometers
R_3 & R_4 = 50-ohm Rheostats
R_5 = 10,000-ohm Rheostat
R_6 = 6000-ohm Resistor
R_7 = 2000-ohm Resistor
S = 10,000-ohm Potentiometer
I = 0-100 Milliammeter
G = Sensitive Galvanometer
R_g = 10^7- to 10^{11}-ohm Resistor
B = 12-volt Storage Battery

K-8639662 Fig. 3—Stabilized One-tube Circuit 8-18-44

The galvanometer deflection is calibrated in terms of input voltage using the millivoltmeter V.

III. Stabilized one-tube circuit

In order to obtain the greatest sensitivity using one tube and for making measurements over a long period of time, the circuit shown in *Fig. 3* is recommended.* This circuit can be adjusted so that changes in battery voltage as well as drift in plate current have no effect on the balance of the galvanometer. Adjust the circuit by setting the filament current (I) to obtain approximately the rated filament potential, and bring the galvanometer to zero by varying R_5 and R_4. Then by varying R_3 a point should be found where the rate of change of galvanometer deflection with filament current is zero. If this point cannot be found within a range of plus or minus 3 or 4 per cent of filament current, change the setting of R_2 and repeat. Then balance the galvanometer to zero with R_4 and R_5. After operating for 20 or 30 minutes it may be necessary to readjust R_4 and R_5 for zero balance.

The operation of this circuit is identical with that shown in *Fig. 1* and the same equations for sensitivity and current amplification will apply.

IV. Two-stage amplifier

When it is desired to measure currents of 10^{-9} to 10^{-14} amperes with a very sturdy galvanometer or microammeter, the circuit of *Fig. 4* has been found useful. The first stage may be any of the

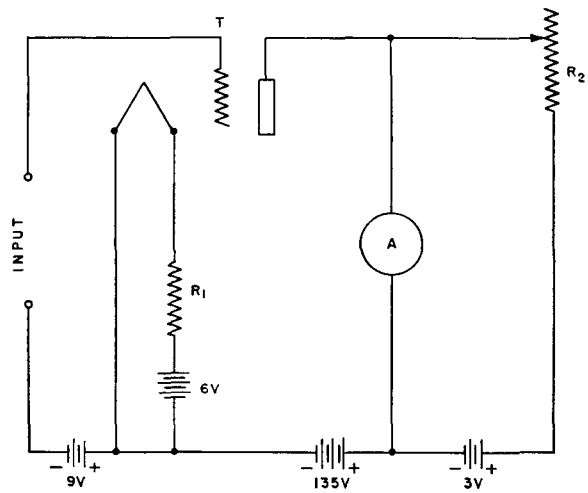

R_1 = 4-ohm Resistor
R_2 = 400-ohm Rheostat
A = Microammeter
T = 112-A or Equivalent

K-8639663 Fig. 4—Two-stage Amplifier 8-18-44

circuits previously described but having the input terminals of this second stage connected in place of the galvanometer. The second stage is balanced by adjustment of R_2.

With a microammeter of given range, the sensitivity of the amplifier may be varied by changing the grid resistance R_g. The over-all sensitivity of this circuit connected to the circuit shown in *Fig. 1* or *Fig. 3* is approximately

* *Lee A. DuBridge, and Hart Brown—Review of Scientific Instruments, Vol. IV, No. 10, pages 532–536, October 1933.*

$$\frac{i_A}{i} = \frac{\mu 1\ R_s}{r_p + R_s} \times gm_2 R_g$$

where i_A = *microammeter current*
i = *input current*
r_p = *internal plate resistance of first tube*
$\mu 1$ = *voltage amplification factor of first tube*
gm_2 = *grid-plate transconductance of second tube*
R_s = *resistance of S in Fig. 1 or 3.*

For the FP-54, $\mu 1 = 0.9$ and $r_p = 45{,}000$ ohms, and for the second tube, gm_2 may equal 1500 microamperes per volt. Hence if $r_g = 10^{11}$ ohms and $r_s = 10{,}000$ ohms, an output current i_A of 1 microampere will be obtained for $i = 4 \times 10^{-14}$ ampere (approx) and the current amplification is 2.5×10^7.

It has been found that i_A is a linear function of i for input voltages ($= R_g i$) less than about 0.5 volt. For larger input voltages, up to 5 volts, a null method should be used to prevent the FP-54 grid voltage becoming low enough to draw a high grid current.

High Resistance

Metallic grid-leak resistors may now be obtained up to 100 megohms and composition resistors up to 10^{14} ohms. Resistances up to a thousand megohms may be made by ruling India ink marks on drawing paper or hard rubber or amber, and inclosing in a drying tube. Still higher resistances may be made by evaporating or sputtering thin metal films onto a glass or quartz rod, keeping the rod in paraffin or in vacuum.

PRECAUTIONARY OPERATING NOTES

1. The whole circuit, including batteries, should be shielded carefully from external electrostatic fields by an earthed metal shield.
2. The tubes should be kept dry. It has been found satisfactory to inclose circuit and tubes in a metal-lined box in which a drying agent is kept.
3. Only the best insulation, such as quartz or amber, should be used in the control-grid circuit. The connections should be self-supporting as much as possible.
4. Rheostat slides should make firm positive contact. Cleaning with sandpaper is advised.
5. The switches S_1 and S_2 used in the circuit of *Fig. 2* should be of small capacitance and without contact potentials.
6. The output current is a linear function of input voltage over only a limited range. The amplifier must be calibrated if a direct deflection rather than a null method is to be used.
7. Keep all batteries in good condition.

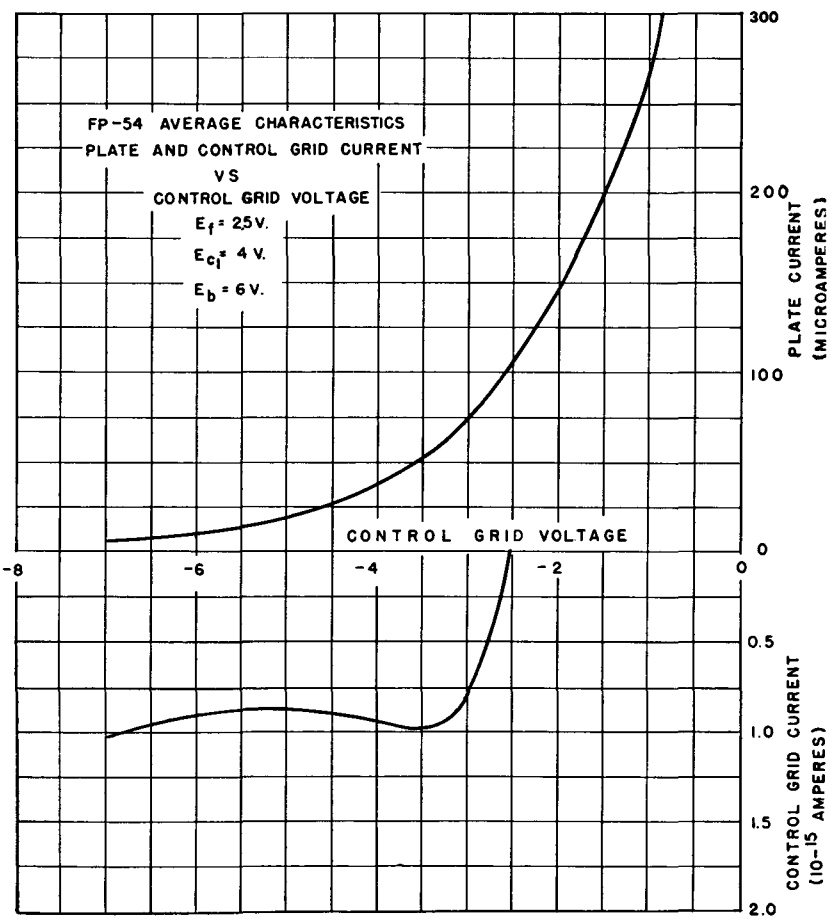

K-9033584 FIG. 5 1-13-45

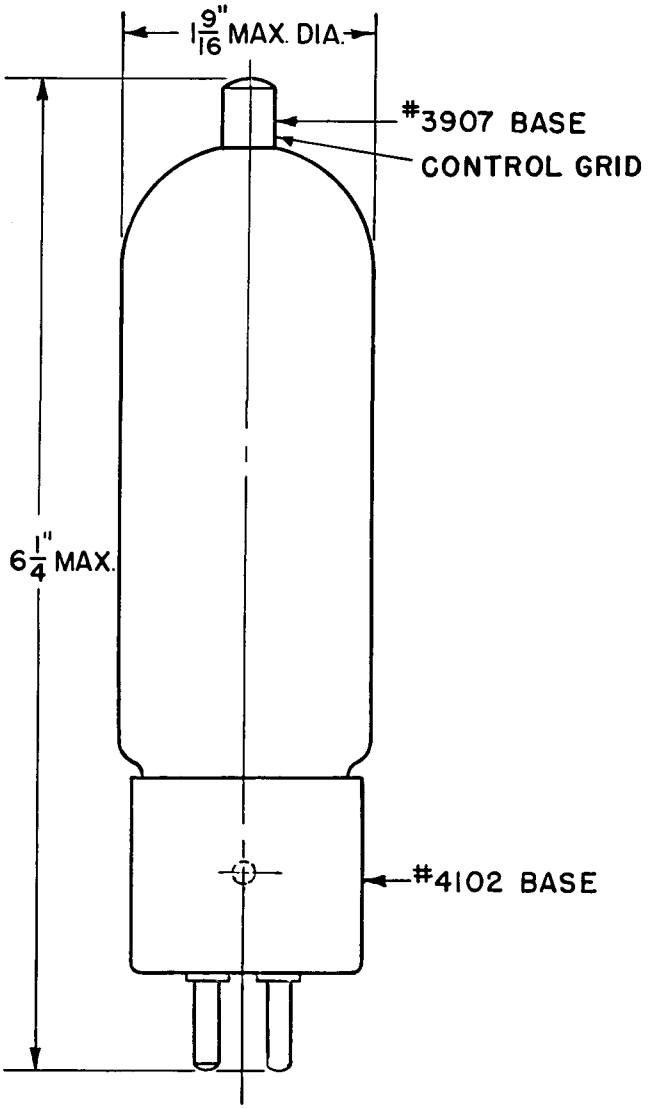

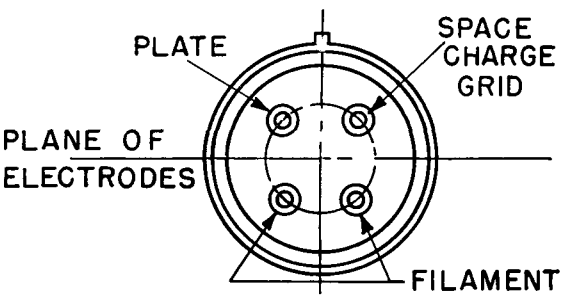

OUTLINE FP-54 PLIOTRON

K-4903522

6-9-44

Electronics Department
GENERAL ELECTRIC
Schenectady, N. Y.

4-45 (4M)
Filing No 8850