THYRATRON

DESCRIPTION

The FG-17 thyratron is a negative-control mercury-vapor tube for use where it is desired to actuate the tube with a change in negative grid voltage. It requires relatively little grid power and is suitable for use in relay circuits where current flow is desired in the absence of grid excitation.

TECHNICAL INFORMATION

These data are for reference only. For design information refer to specifications.

GENERAL CHARACTERISTICS

Number of electrodes				3
Electrical				
Cathode—Filamentary type				
Filament voltage				2.5 volts
Filament current, approx.				5.0 amperes
Filament heating time, typical				5 seconds
Peak voltage drop, typical				16 volts
Approximate control characteristics				
Anode voltage	50	100	1000	volts
Grid voltage	0	−2.25	−6.50	volts
Anode to grid capacitance, approx				4.4 micromicrofarads
Ionization time, approx				10 microseconds
Deionization time, approx.				1000 microseconds
Mechanical				
Net weight, approx.				3 ounces
Shipping weight, approx.				4 pounds
Mounting position				vertical, base down

Electronic TUBE

GENERAL ELECTRIC

TECHNICAL INFORMATION (CONT'D)

MAXIMUM RATINGS

Maximum peak anode voltage		
Inverse	5000	volts
Forward	2500	volts
Maximum negative grid voltage		
Before conduction	500	volts
During conduction	10	volts
Maximum anode current		
Instantaneous, 25 cycles and above	2.0	amperes
Instantaneous, below 25 cycles	1.0	ampere
Average	0.5	ampere
Surge, for design only	40	amperes
Duration of surge current	0.1	second
Maximum grid current		
Instantaneous	0.25	ampere
Average	0.05	ampere
Maximum time of averaging current	15	seconds
Temperature limits, condensed mercury	+40 to +80	centigrade
Recommended temperature, condensed mercury	+40	centigrade

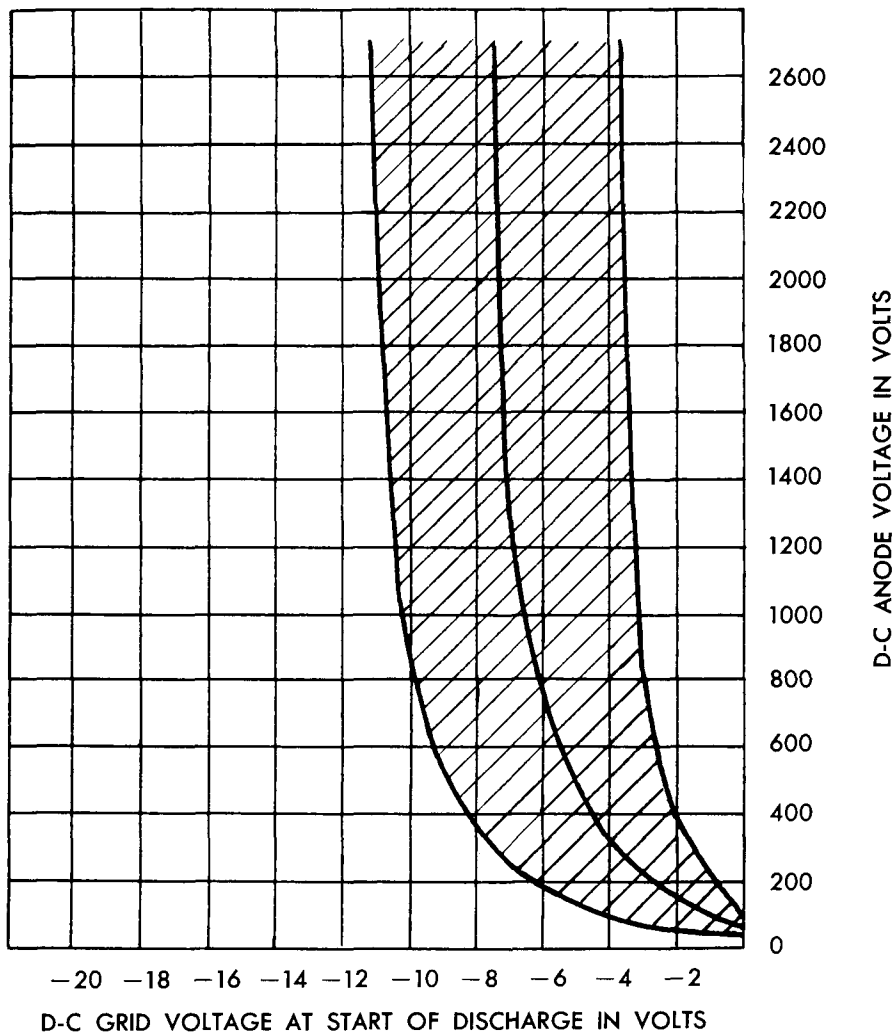

K-8639302 7-29-43

THYRATRON FG-17
TYPICAL CONTROL CHARACTERISTIC
SHADED AREA SHOWS RANGE OF CHARACTERISTICS
CONDENSED MERCURY TEMPERATURE 40 C

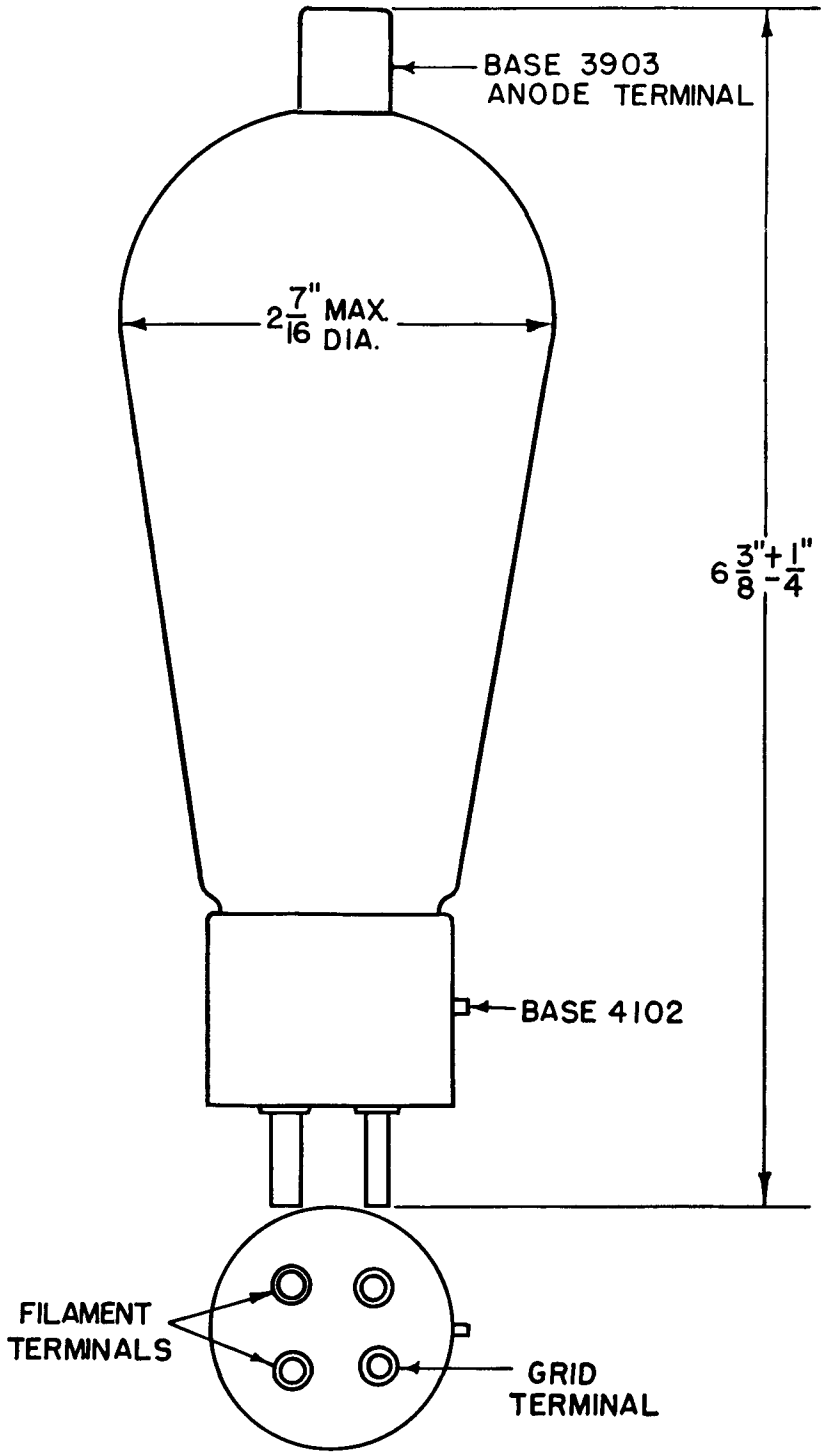

K-4373365 12-30-44

OUTLINE
FG-17 THYRATRON

Electronics Department
GENERAL ELECTRIC
Schenectady, N. Y.

4-45 (4M)
Filing No. 8850