FEDERAL POWER TRIODE
Type F-880
20 Kilowatts Plate Dissipation

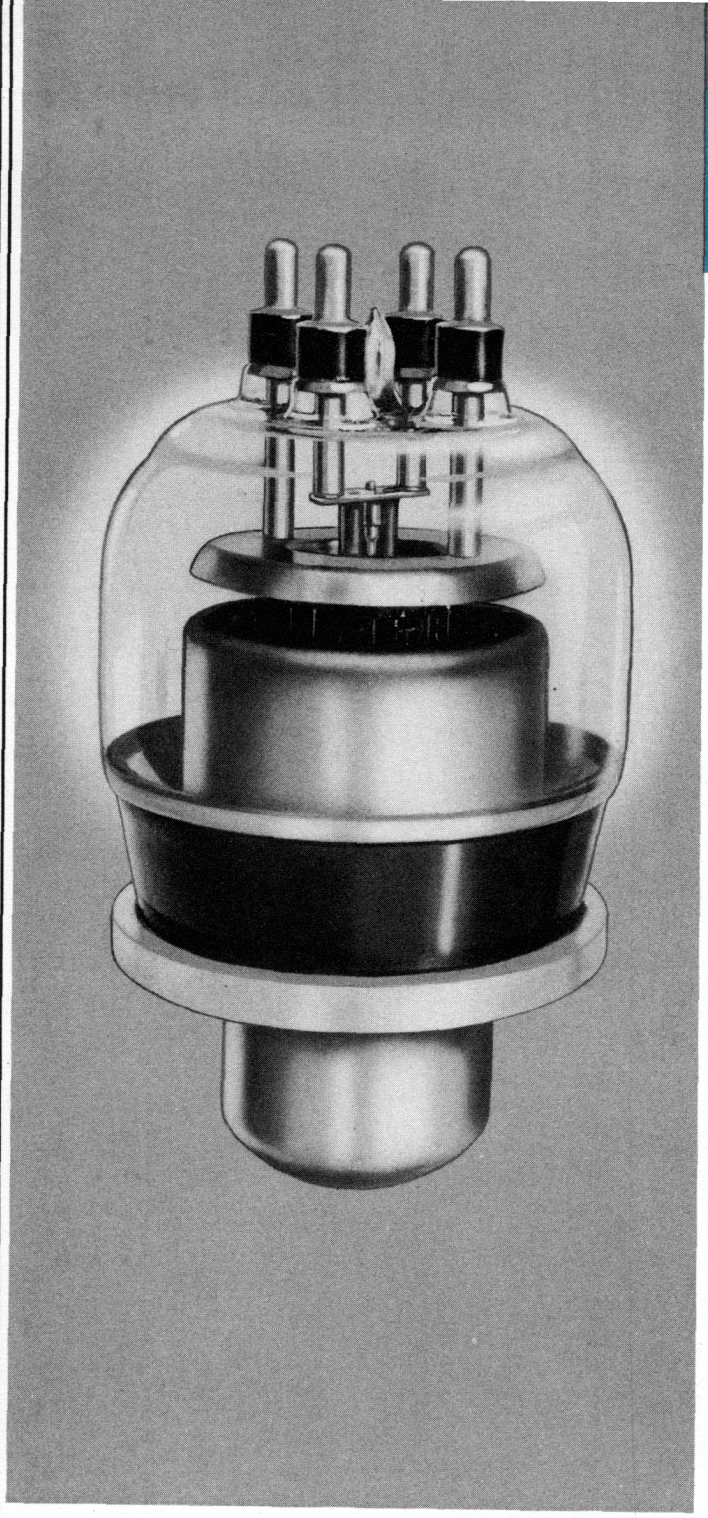

GENERAL DATA

DESCRIPTION:

Federal's F-880 is a three-electrode tube built for use as a radio-frequency amplifier, oscillator, or a Class B modulator. The anode is water-cooled, capable of dissipating 20 kilowatts. The cathode is a pure tungsten filament of individual "hairpin" design, and is spring-loaded to prevent filament bowing. The design of the terminal mount connections and the re-entrant anode minimize lead inductance, make the tube particularly suitable for high-frequency applications up to 25 megacycles at full ratings, 100 megacycles at reduced ratings.

Electrical:

Filament Voltage	12.6 Volts
Filament Current	320 Amperes
Filament Starting Current	480 Amperes max.
Filament Cold Resistance	.003 Ohms
Amplification Factor, at I_b = 2.0 amps., E_c = —100 volts	20
Interelectrode Capacitances	
Grid-Plate	24 $\mu\mu f$
Grid-Filament	35 $\mu\mu f$
Plate-Filament	2 $\mu\mu f$

Mechanical:

Mounting Position— Vertical, anode down	
Type of Cooling— Water and Forced Air	
Water Flow on Anode	20 GPM
Maximum Outgoing Water Temperature	70° C
Air Flow (to bulb and seals) from a 3-inch diameter nozzle	20 CFM
Maximum Glass Temperature	150° C
Net Weight, approximate	7 Pounds

In the development and production of vacuum tubes Federal carries on extensive laboratory experimentation: new techniques, new processes, new applications.

Copyright 1949, Federal Telephone and Radio Corporation

FEDERAL POWER TRIODE
Type F-880
20 Kilowatts Plate Dissipation

Maximum Ratings vs. Operating Frequency

Frequency	25	50	100 Megacycles
Percentage of Maximum Rated Plate Voltage and Plate Input			
Class B—Max. Plate Voltage	100	80	60 Per Cent
Max. Plate Input	100	94	75 Per Cent
Class C—Plate Modulated	100	72	45 Per Cent
Class C—Unmodulated	100	75	50 Per Cent

Maximum Ratings and Typical Operating Conditions

AUDIO-FREQUENCY POWER AMPLIFIER AND MODULATOR—CLASS B

Maximum Ratings, Absolute Values

DC Plate Voltage	10,500 Volts
Maximum Signal DC Plate Current†	5 Amperes
Maximum Signal Plate Input†	40 Kilowatts
Plate Dissipation†	15 Kilowatts

Typical Operation

(Unless otherwise specified, values are for two tubes)

DC Plate Voltage	7,500	10,000 Volts
DC Grid Voltage	—340	—450 Volts
Peak A-F Grid-to-Grid Voltage	1,450	1,680 Volts
Zero Signal DC Plate Current	1.0	1.0 Amperes
Maximum Signal DC Plate Current	6.7	7.0 Amperes
Effective Load Resistance, Plate to Plate	2,300	3,100 Ohms
Maximum Signal Driving Power, Approx.	490	540 Watts
Maximum Signal Power Output, Approx.	31.5	46 Kilowatts

†Averaged over any audio frequency cycle of sine-wave form.

RADIO-FREQUENCY POWER AMPLIFIER—CLASS B

(Carrier conditions per tube for use with a maximum modulation factor of 1.0)

Maximum Ratings, Absolute Values

DC Plate Voltage	10,500 Volts
DC Plate Current	4 Amperes
Plate Input	32 Kilowatts
Plate Dissipation	20 Kilowatts

Typical Operation

DC Plate Voltage	7,500	10,000 Volts
DC Grid Voltage	—340	—460 Volts
Peak R-F Grid Voltage	570	595 Volts
DC Plate Current	3.3	2.75 Amperes
DC Grid Current, approximate	.013	.009 Amperes
Driving Power, approximate‡	1,250	900 Watts
Power Output, approximate	8	9 Kilowatts

‡At crest of audio-frequency cycle with modulation factor of 1.0.

PLATE-MODULATED RADIO-FREQUENCY POWER AMPLIFIER—CLASS C TELEPHONY

(Carrier conditions per tube for use with a maximum modulation factor of 1.0)

Maximum Ratings, Absolute Values

DC Plate Voltage	10,500 Volts
DC Grid Voltage	—1,200 Volts
DC Plate Current	3.6 Amperes
DC Grid Current	0.8 Amperes
Plate Input	36 Kilowatts
Plate Dissipation	12 Kilowatts

Typical Operation

DC Plate Voltage	7,500	10,000 Volts
DC Grid Voltage	—1,000	—1,200 Volts
Peak R-F Grid Voltage	1,560	1,840 Volts
DC Plate Current	3.0	3.6 Amperes
DC Grid Current, approximate	0.57	0.64 Amperes
Driving Power, approximate	850	1,100 Watts
Power Output, approximate	16	27 Kilowatts

RADIO-FREQUENCY POWER AMPLIFIER AND OSCILLATOR—CLASS C TELEGRAPHY

(Key-down conditions per tube without amplitude Modulation)¶

Maximum Ratings, Absolute Values

DC Plate Voltage	10,500	15,000* Volts
DC Grid Voltage	—1,200	—1,600* Volts
DC Plate Current	6.0	4.5* Amperes
DC Grid Current	0.8	1.0* Amperes
Plate Input	60	67.5* Kilowatts
Plate Dissipation	20	20* Kilowatts

Typical Operation

DC Plate	7,500	10,000	10,000 Volts
DC Grid Voltage	—600	—800	—1,000 Volts
Peak R-F Grid Voltage	1,250	1,460	1,830 Volts
DC Plate Current	4.8	4.5	6.0 Amperes
DC Grid Current, approximate	0.79	0.78	0.8 Amperes
Driving Power, approximate	920	1,000	1,500 Watts
Power Output, approximate	24	33	40 Kilowatts

¶Modulation essentially negative may be used if the positive peak of the envelope does not exceed 115 per cent of carrier conditions.

*These ratings apply only at a frequency of 1,500 kilocycles or less.

The new and improved filament design in Federal's Type F-880 reduces the tendency to filament bowing.

FEDERAL POWER TRIODE
Type F-880
20 Kilowatts Plate Dissipation

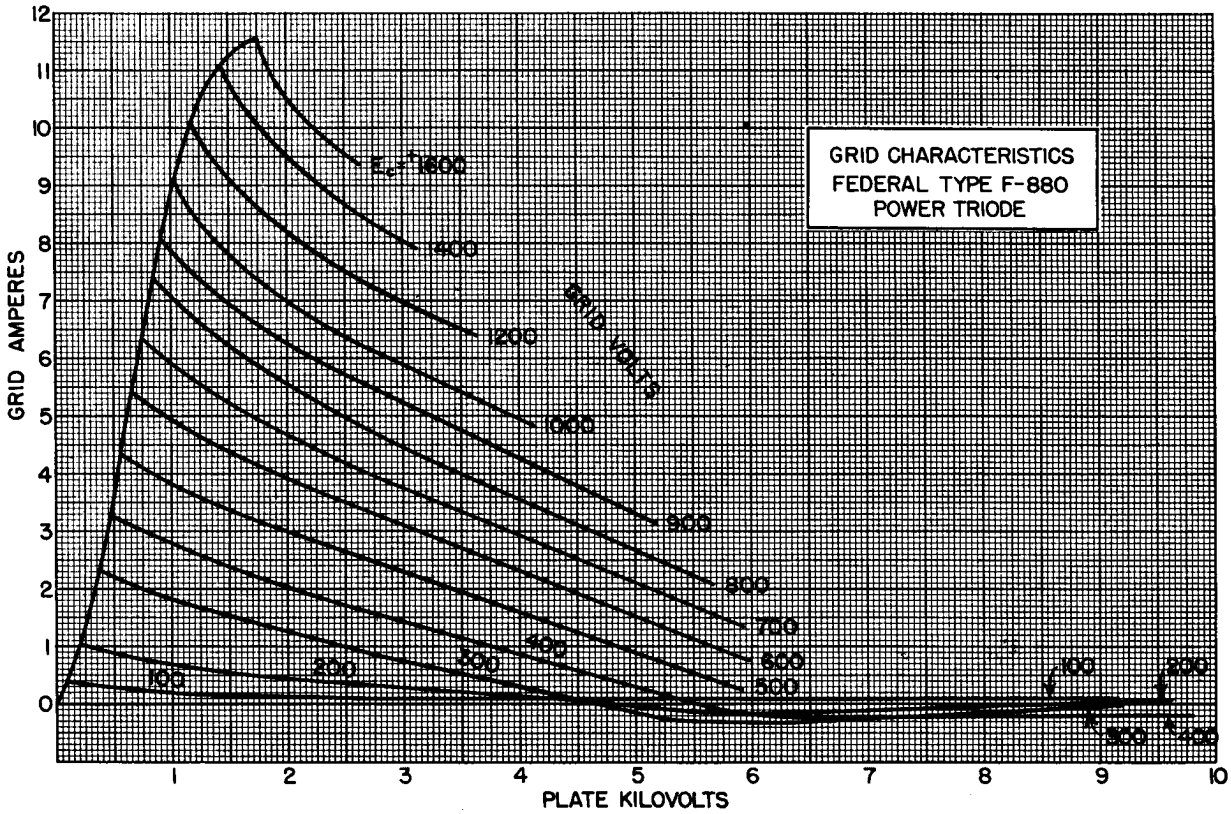

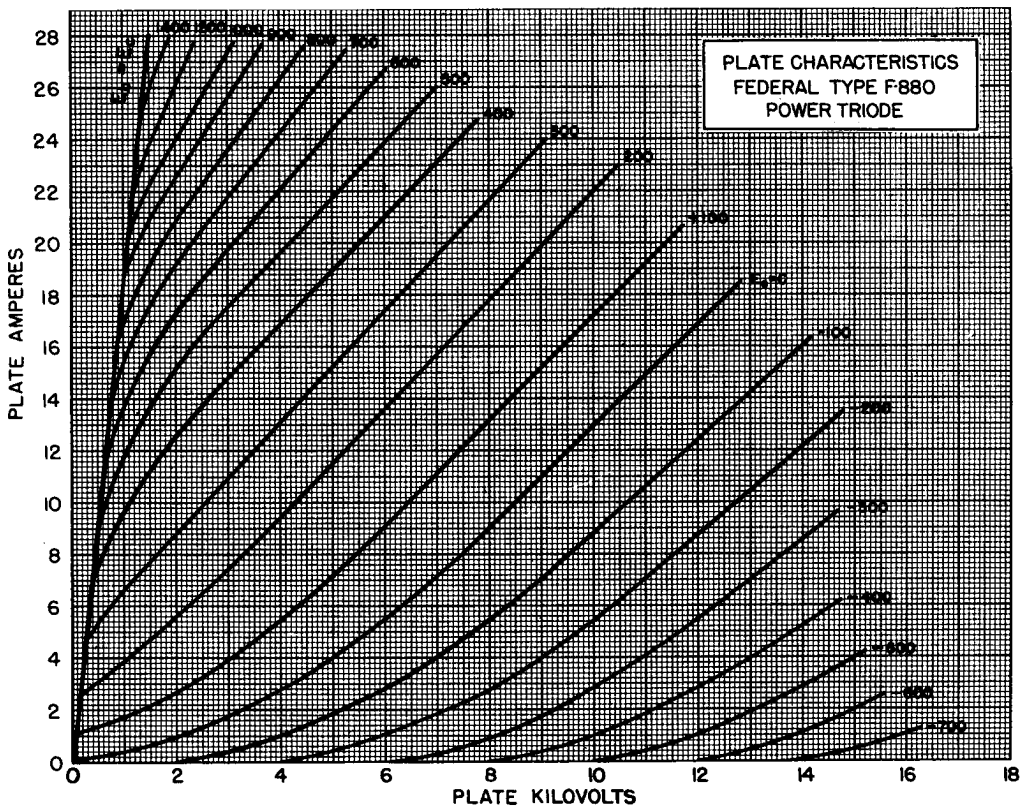

AN IT&T ASSOCIATE

FEDERAL POWER TRIODE
Type F-880
20 Kilowatts Plate Dissipation

Backed by years of engineering and manufacturing experience, Federal tubes have consistently set the world's *standards of performance* in broadcast service.

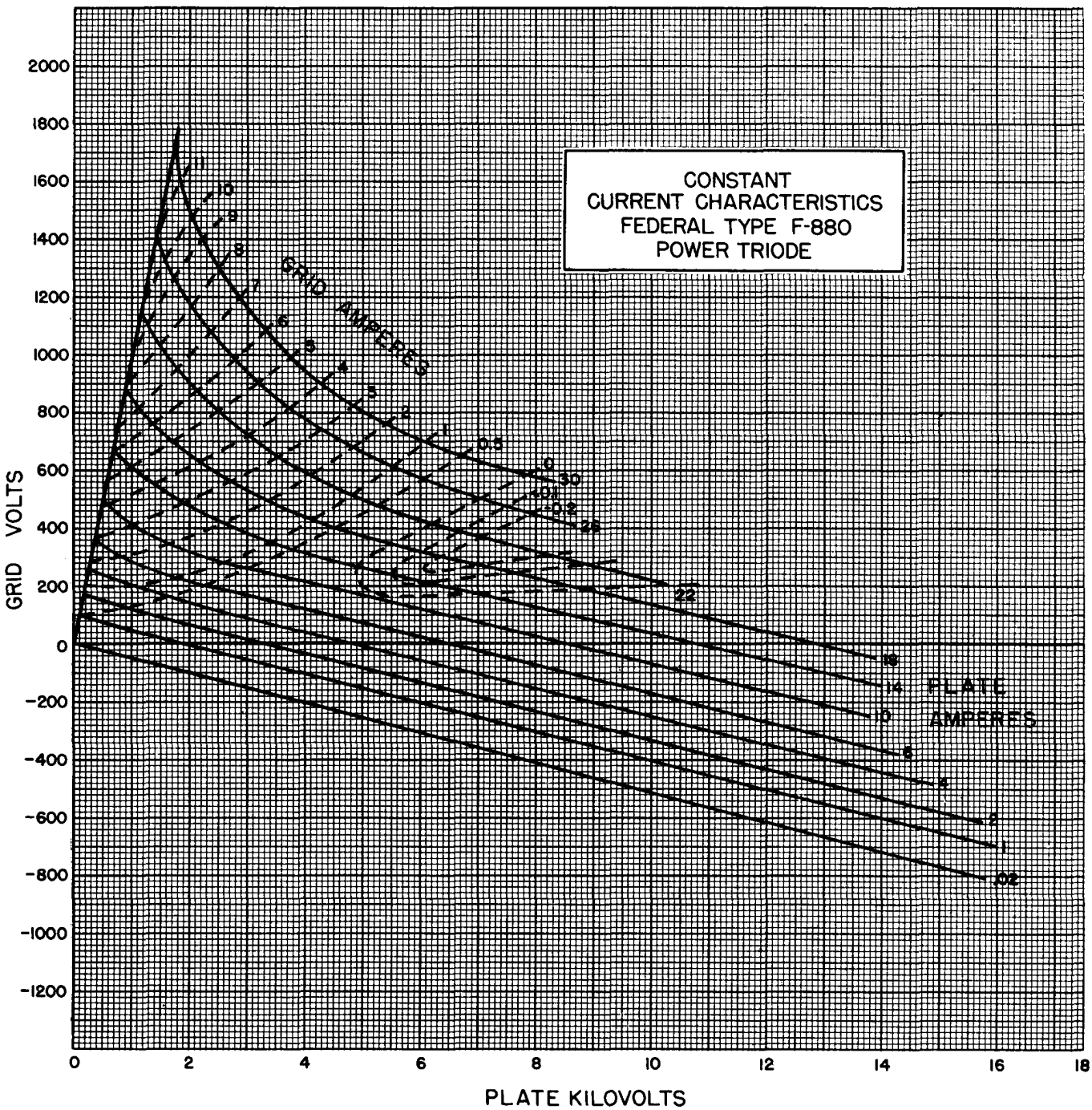

More than 100,000 letters requesting copies of Federal's *Handbook of Tube Operation* have been received from engineers in all parts of the world. Would you care for a copy?

FEDERAL POWER TRIODE
Type F-880
20 Kilowatts Plate Dissipation

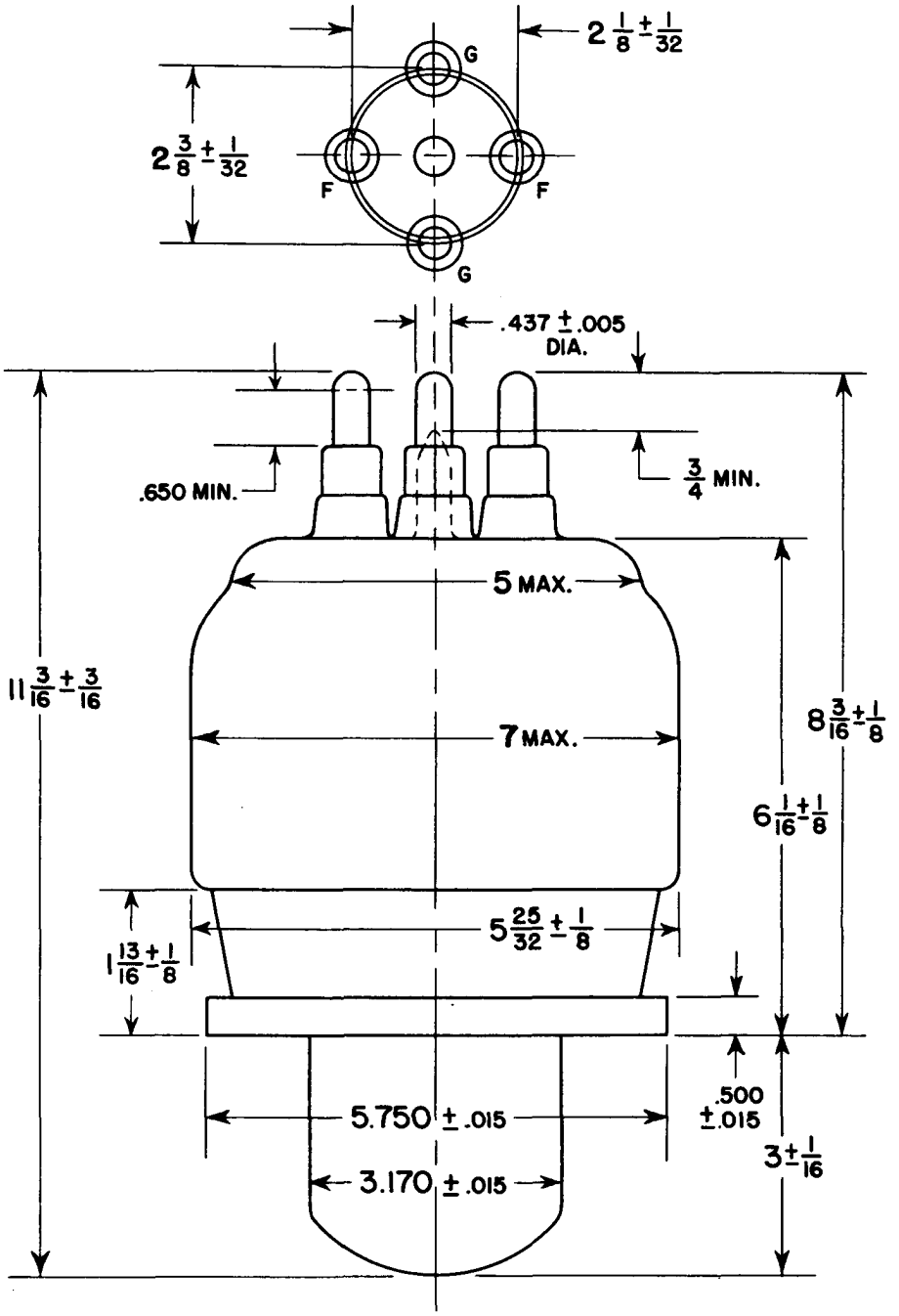

OUTLINE DRAWING
F-880

Federal Telephone and Radio Corporation
100 Kingsland Road Clifton, New Jersey

FEDERAL TELEPHONE & RADIO

FTR

Federal Always Has
Made Better Tubes

Form FJ-415 Printed in U. S. A.