ITT Electron Tube Division
BOX 104 CLIFTON, NEW JERSEY
INTERNATIONAL TELEPHONE AND TELEGRAPH CORPORATION



## DESCRIPTION

The F-8386, F-8387 and F-8388 tubes are general purpose metal and ceramic triodes for use as amplifiers, oscillators or Class B modulators under CW or pulsed conditions. The cathode is a thoriated tungsten filament. The F-8386 has a heavy wall anode capable of dissipating 100 Kw with circulating water. The F-8387 has a forced-air cooled copper anode-radiator assembly of brazed construction capable of dissipating 45 Kw. The F-8388 has a grooved, heavy walled anode capable of dissipating 100 Kw when evaporation cooled by water. Maximum CW ratings apply up to 30 mc.

## ELECTRICAL

| | | |
|---|---|---|
| Filament Voltage | 14.5 | volts |
| Filament Current | 330 | amperes |
| Filament Starting Current | 1,000 | amperes |
| Filament Heating Time, minimum | 15 | seconds |
| Filament Cold Resistance | .006 | ohms |
| Amplification Factor | 20 | |
| Inter-electrode Capacitance | | |
| Grid-Plate | 85 | μμf |
| Grid-Filament | 120 | μμf |
| Plate-Filament | 6.0 | μμf |

## MECHANICAL

Mounting Position: Vertical, Anode down

| | F-8386 | F-8387 | F-8388 | |
|---|---|---|---|---|
| Plate Dissipation | 100 | 45 | 100 | kilowatts |
| Water Flow | 30 | - | - | gpm |
| Air Flow | - | 1,700 | - | cfm |
| Static Air Pressure | - | 6.5 | - | inches of water |
| Max. Outgoing Water Temperature | 70 | - | - | °C |
| Max. Water Pressure | 80 | - | - | psi |
| Max. Incoming Air Temperature | - | 45 | - | °C |
| Max. Ceramic & Seal Temperature | 250 | 250 | 250 | °C |
| Evaporation Rate | - | - | .75 | gpm |
| Net Weight, approx. | 36 | 75 | 71 | lbs. |



from JEDEC release #4713, May 25, 1964

MAXIMUM RATINGS AND TYPICAL OPERATING CONDITIONS

Audio-Frequency Power Amplifier and Modulator - Class B

Maximum Ratings, Absolute Values

| | | |
|---|---|---|
| D-C Plate Voltage | 17,000 | volts |
| Max. Signal D-C Plate Current * | 16 | amperes |
| Max. Signal Plate Input * | 250 | kw |
| Plate Dissipation * | | |
| Refer to Plate Dissipation ratings on page 1 | | |

Typical Operation
(Unless otherwise specified, values are for two tubes)

| | | |
|---|---|---|
| D-C Plate Voltage | 12,000 | volts |
| D-C Grid Voltage | -480 | volts |
| Peak A-F Grid-to-Grid Voltage | 1,660 | volts |
| Zero Signal D-C Plate Current | 2 | amperes |
| Max. Signal D-C Plate Current | 22.3 | amperes |
| Effective Load Resistance, Plate-to-Plate | 1,075 | ohms |
| Max. Signal Driving Power, approx. | 550 | watts |
| Max. Signal Power Output, approx. | 165 | kw |

*Averaged over any audio frequency cycle of sine-wave form.

Plate-Modulated Radio-Frequency Power Amplifier - Class C Telephony
(Carrier conditions per tube for use with a maximum modulation factor of 1.0)

Maximum Ratings, Absolute Values

| | | |
|---|---|---|
| D-C Plate Voltage | 13,000 | volts |
| D-C Grid Voltage | -3,000 | volts |
| D-C Plate Current | 16 | amperes |
| D-C Grid Current | 3.5 | amperes |
| Plate Input | 190 | kw |
| Plate Dissipation | | |
| 67% of rated Plate Dissipation referenced on page 1 | | |

Typical Operation

| | | |
|---|---|---|
| D-C Plate Voltage | 12,000 | volts |
| D-C Grid Voltage | -1,400 | volts |
| Peak R-F Grid Voltage | 2,100 | volts |
| Peak R-F Plate Voltage | 10,000 | volts |
| D-C Plate Current | 15 | amperes |
| D-C Grid Current | 2.2 | amperes |
| Driving Power, approx. | 4.6 | kw |
| Power Output, approx. | 136 | kw |

Radio-Frequency Power Amplifier and Oscillator - Class C Telegraphy
(Key down conditions per tube without amplitude modulation)+

Maximum Ratings, Absolute Values

| | | |
|---|---|---|
| D-C Plate Voltage | 17,000 | volts |
| D-C Grid Voltage | -3,000 | volts |
| D-C Plate Current | 19 | amperes |
| D-C Grid Current | 3.5 | amperes |
| Plate Input | 250 | kw |
| Plate Dissipation | | |

Refer to Plate Dissipation ratings on page 1

Typical Operation

| | Cathode Drive | Grid Drive | | |
|---|---|---|---|---|
| D-C Plate Voltage | 11,000 | 12,000 | 15,500 | volts |
| D-C Grid Voltage | -1,300 | -1,500 | -1,800 | volts |
| Peak R-F Grid Voltage | 2,000 | 2,200 | 2,500 | volts |
| Peak R-F Plate Voltage | 9,500 | 9,300 | 12,500 | volts |
| D-C Plate Current | 14.4 | 15.5 | 17.0 | amperes |
| D-C Grid Current | 2.6 | 1.7 | 1.5 | amperes |
| R-F Load Resistance | 437 | 325 | 415 | ohms |
| Driving Power, approx. | 32,000 | 3,800 | 3,800 | watts |
| Power Output, approx. | 150 | 135 | 135 | kw |

+Modulation essentially negative may be used if the positive peak of the envelope does not exceed 115 per cent of the carrier conditions.

PULSE SERVICE OPERATIONS

In pulse r-f amplifier service, it is possible to operate the tube under conditions not permissible in CW operation. Because of the wide variety of operating conditions, it is advisable that tube operation recommendations be obtained from our Engineering Department for specific conditions.

Additional information for specific applications can be obtained from the:

ITT Electron Tube Division
Applications Section
P.O. Box 104
Clifton, New Jersey

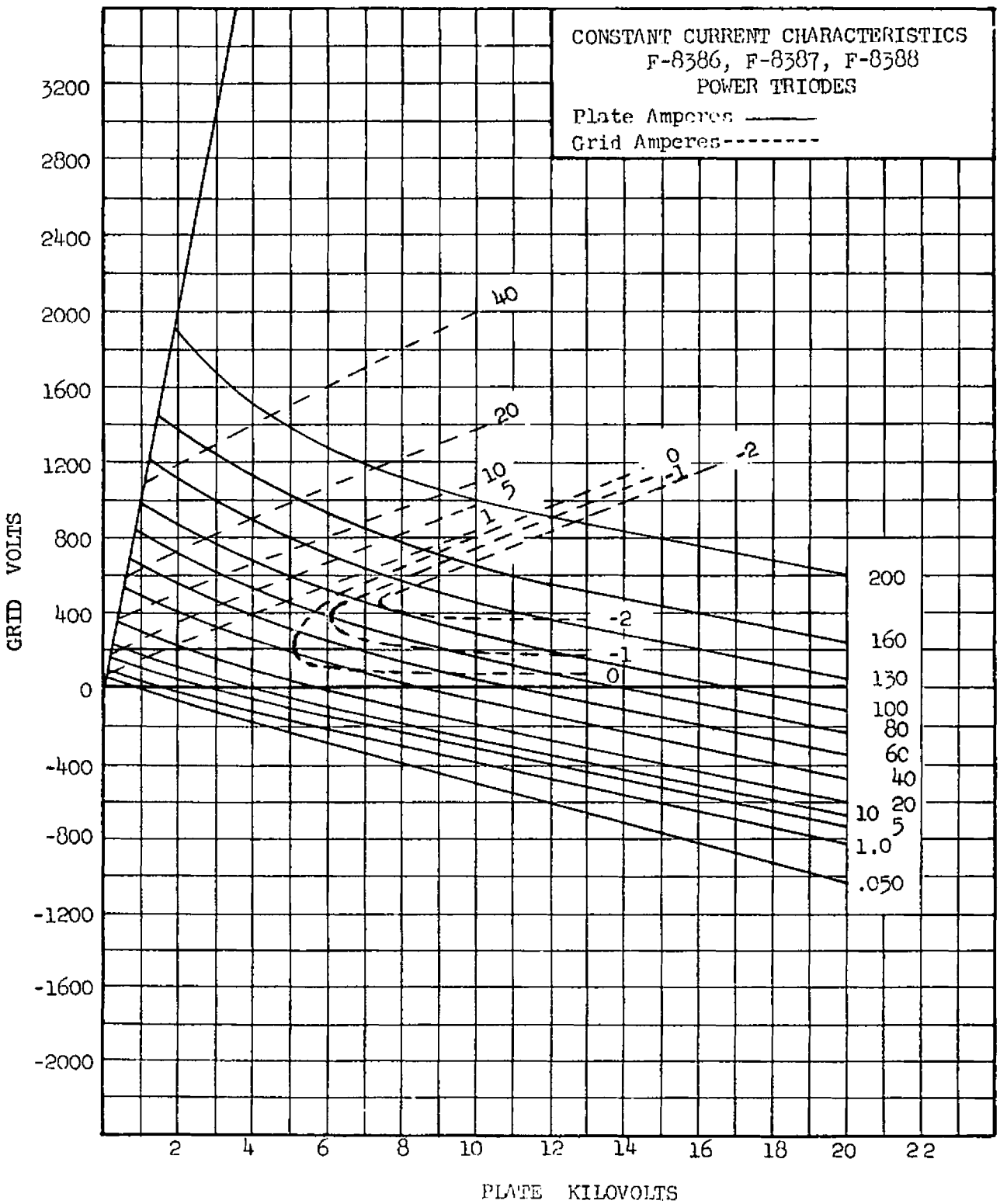
CONSTANT CURRENT CHARACTERISTICS
F-8386, F-8387, F-8388
POWER TRIODES
Plate Amperes ———
Grid Amperes--------
GRID VOLTS
3200
2800
2400
2000
1600
1200
800
400
0
-400
-800
-1200
-1600
-2000
PLATE KILOVOLTS
2
4
6
8
10
12
14
16
18
20
22
40
20
10
5
1
0
-1
-2
200
160
130
100
80
60
40
20
10
5
1.0
.050

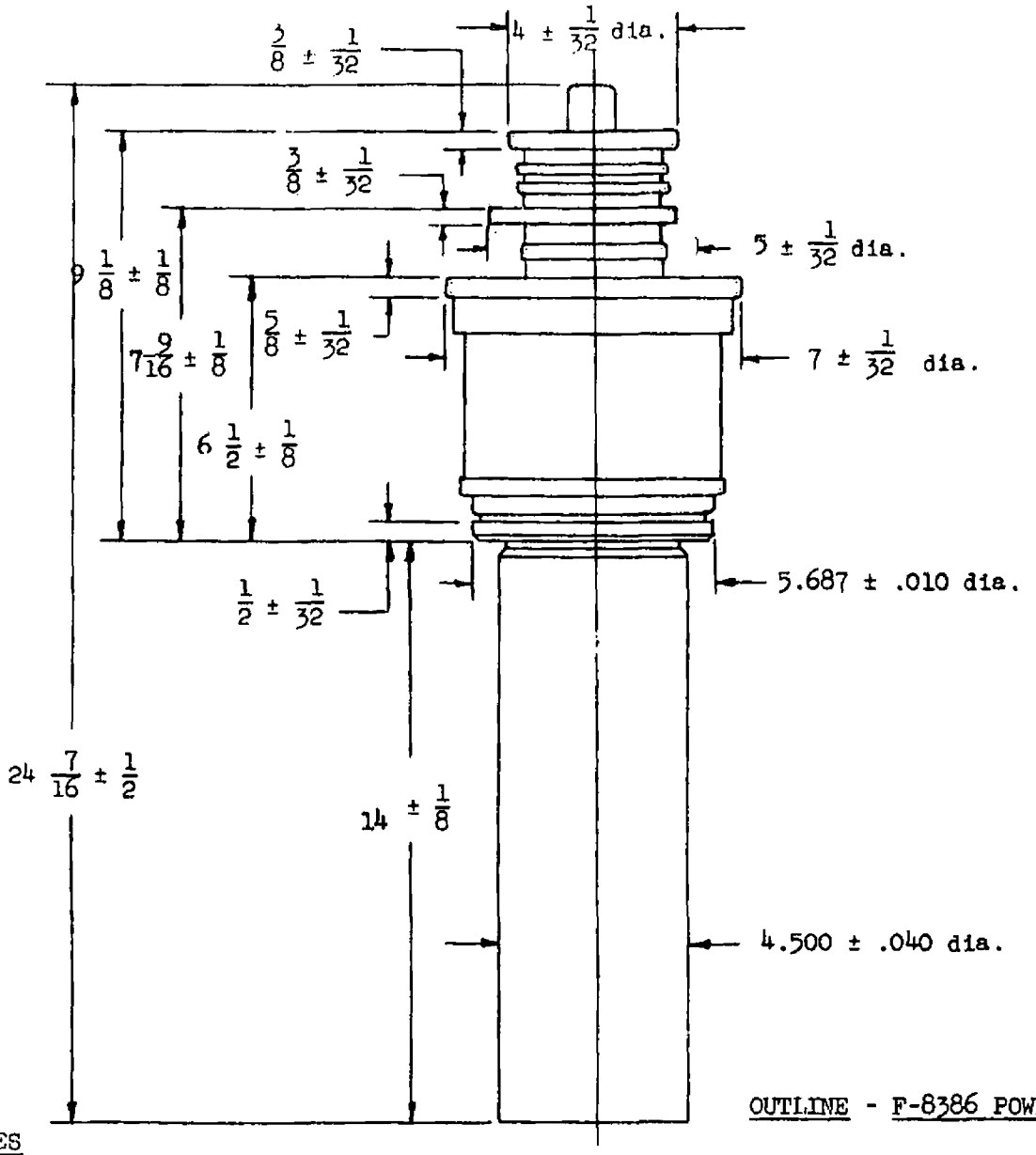


OUTLINE - F-8386 POWER TRIODE

ACCESSORIES

| | | |
|---|---|---|
| Water Jacket | - RT-54319 | "Type D" |
| Grid Conn. Assy. | - RT-55464 | |
| Conn. Fil. #1 Assy. | - RT-55476 | |
| Conn. Fil. #2 Assy. | - RT-55469 | |
| Corona Ring Assy. | - RT-54002 | |
| Ball Gap-Anode Assy. | - RT-55472 | |

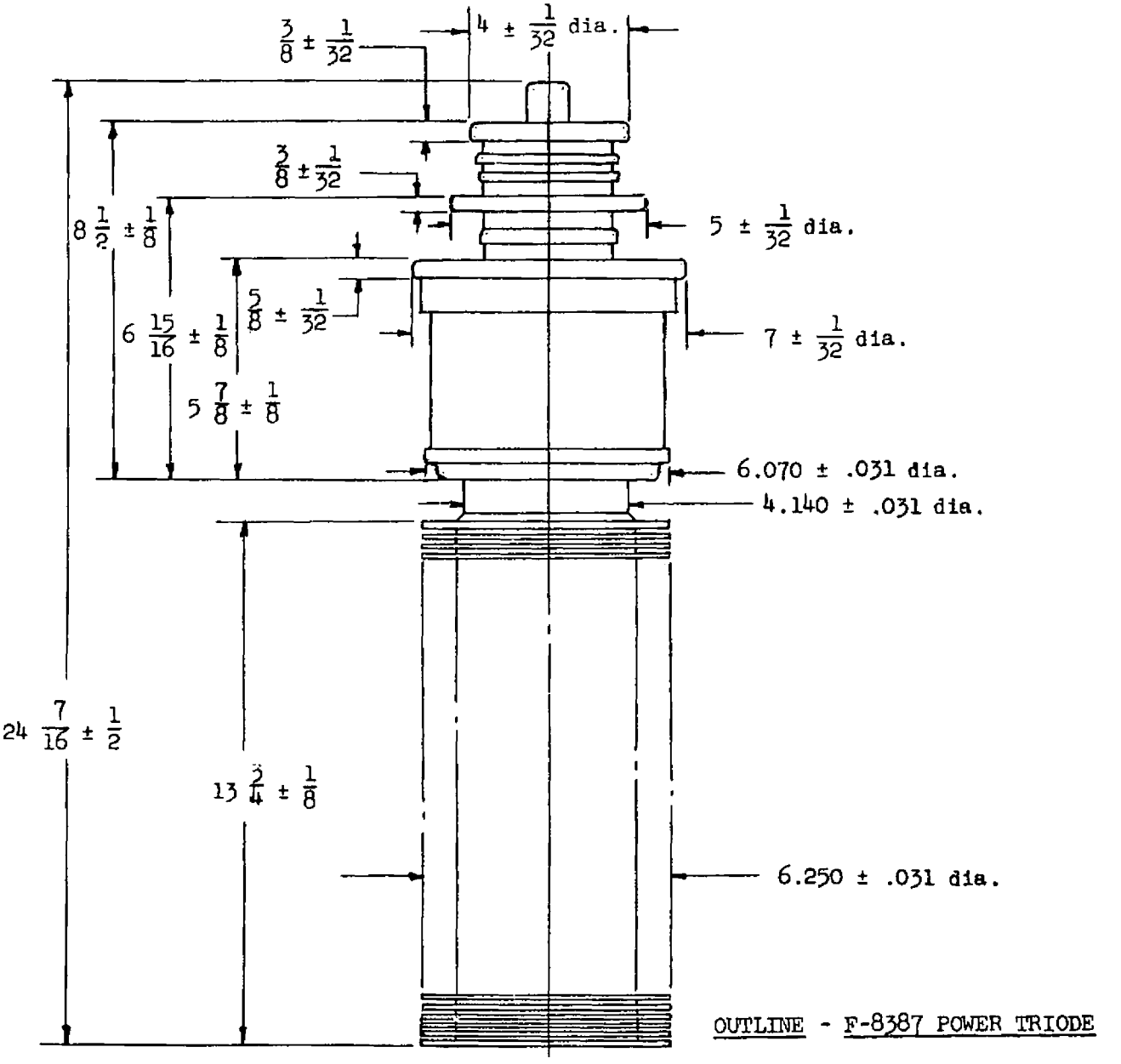


OUTLINE - F-8387 POWER TRIODE

ACCESSORIES

| | | |
|---|---|---|
| Air Distributor | - | RT-55397 |
| Tube Support | - | RT-55398 |
| Grid Conn. Assy. | - | RT-55464 |
| Conn. Fil. #1 Assy. | - | RT-55476 |
| Conn. Fil. #2 Assy. | - | RT-55469 |
| Corona Ring Assy. | - | RT-55532 |
| Ball Gap-Anode Assy. | - | RT-55472 |

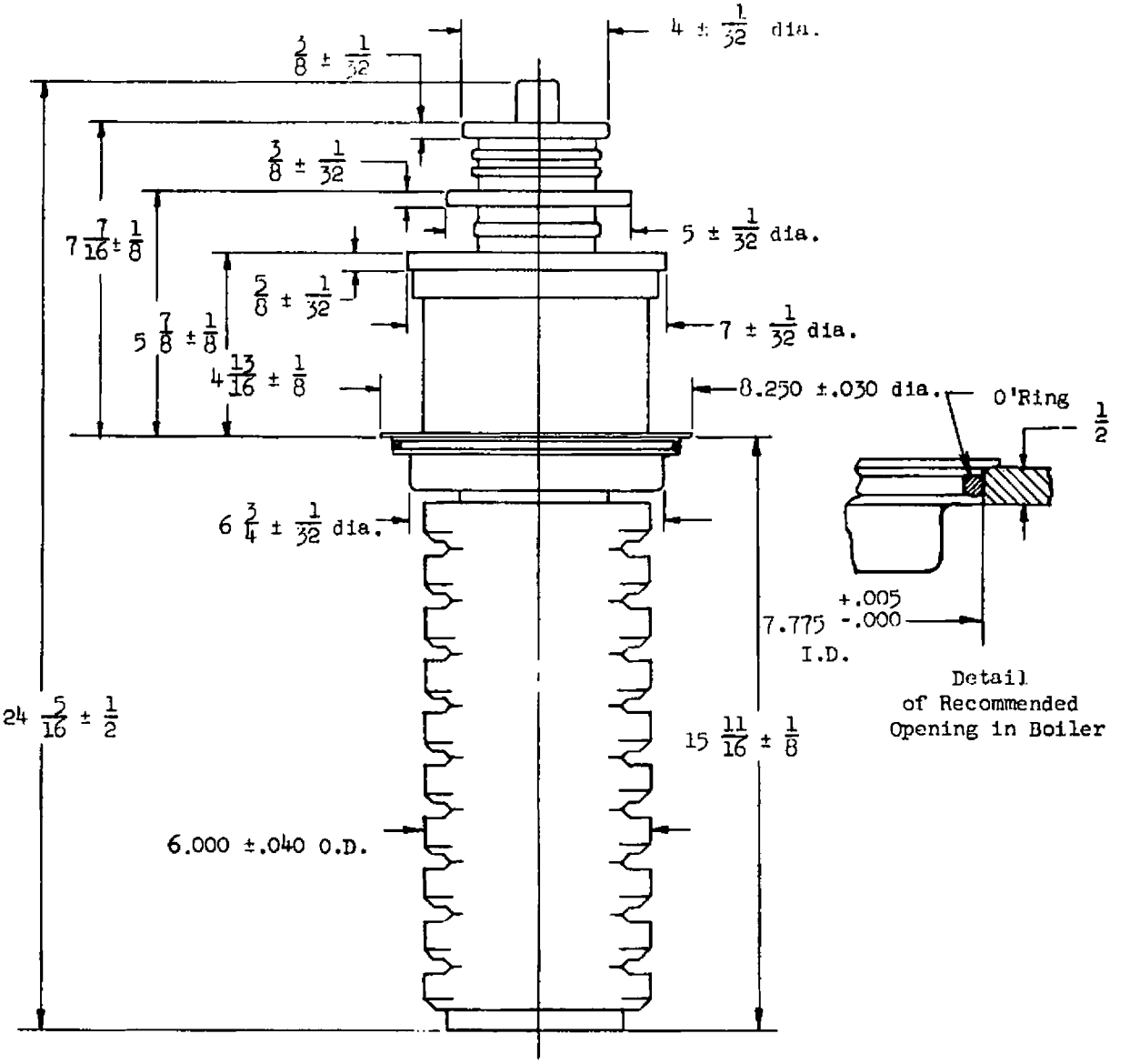


ACCESSORIES:

| | | |
|---|---|---|
| Grid Conn. Assy. | - | RT-55464 |
| Conn. Fil. 1 Assy. | - | RT-55476 |
| Conn. Fil. 2 Assy. | - | RT-55469 |
| Corona Ring Assy. | - | RT-54002 |
| Ball Gap-Anode Assy. | - | RT-55472 |
| O'Ring K-K | - | RT-53836 |
| Cooling Boiler | - | RT-55314, RT-55355 or RT-55574 |

OUTLINE - F-8388 Power Triode