F-8207 *
F-8207J
POWER
DIODES

DESCRIPTION

Tube types F-8207 and F-8207J are diodes designed for rectifier service or in special applications in shunting or charging circuits. The exceptionally rugged construction, free of internal insulators, spring tensioning devices, and fragile elements, make these diodes adaptable to a wide range of uses. The heavy-wall, water-cooled anode is capable of dissipating up to 8 kilowatts at 3.5 gpm. The F-8207J is provided with an integral water jacket and the inlet and outlet water connections are male fittings for quick-connect coupling without tools.

ELECTRICAL

Filament Voltage			15	volts
Filament Current			36	amperes
Filament Starting Current				
Full rated filament voltage may be safely applied to the cold filament				
Maximum Ratings	Shunt	Charging	Rectifier	
Max. Peak Inverse Voltage	30	30	30	kilovolts
Max. Peak Plate Current	100	7.5 rms	20	amperes
Max. Plate Current	-	-	6	avg. amperes

MECHANICAL

Mounting Position		Vertical, Anode up or down		
Type of Cooling		Circulating water		
Plate Dissipation	8	6	4	kilovolts
Water Flow	3.5	2.3	1.0	gpm
Water Jacket Pressure Drop ‡				
Water Pressure, max.			80	psig
Outlet Water Temperature, max.			70	°C
Max. Glass and Seal Temperature			180	°C
Net Weight, approx.			2	lbs.

‡ The pressure drop across the jacket is negligible compared to the drop in the associated plumbing.

Additional information for specific applications can be obtained from:

Electron Tube Applications Section
ITT Components Division
P.O. Box 412
Clifton, New Jersey

* Formerly our D-1050 and D-1050J

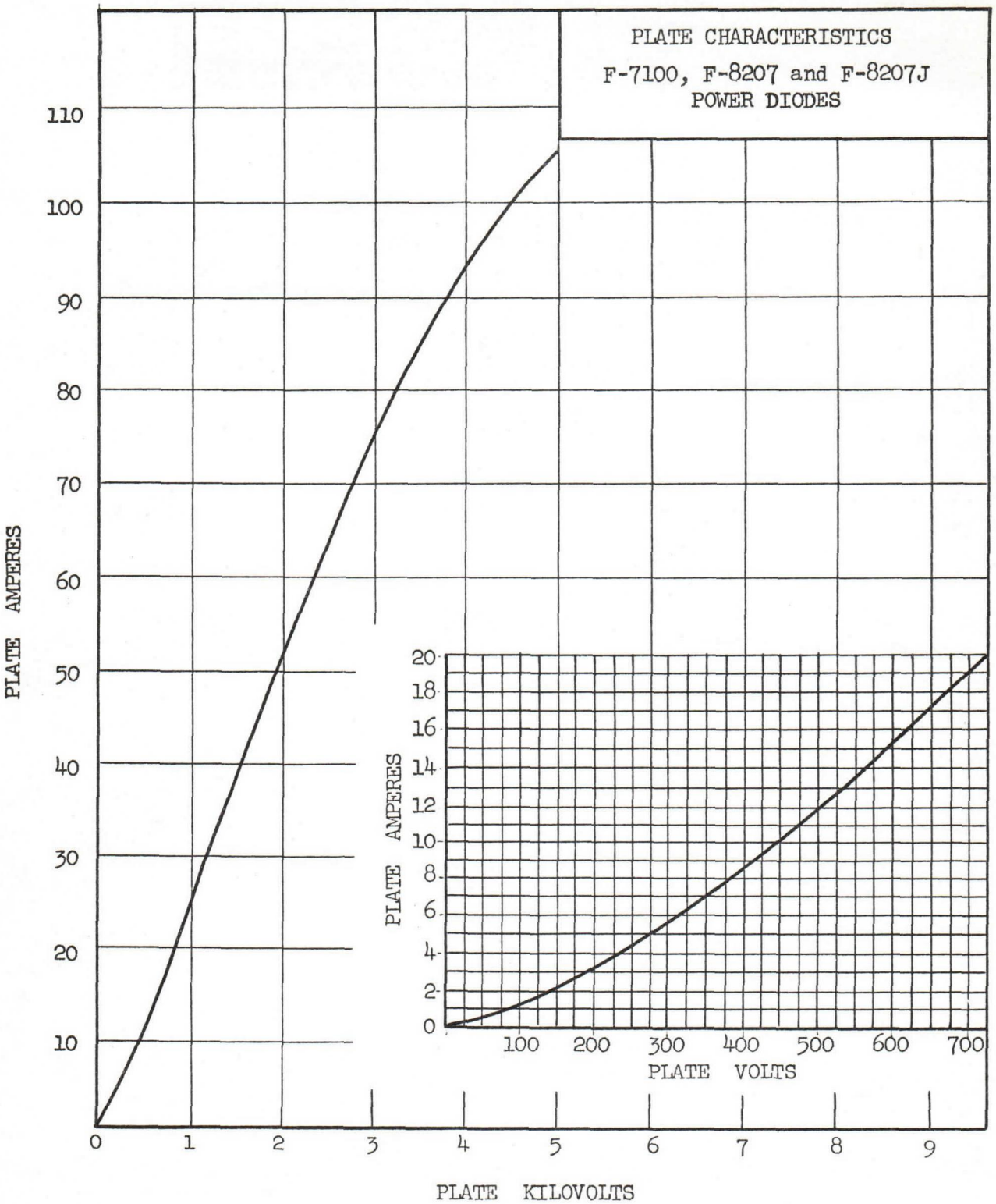
PLATE CHARACTERISTICS
F-7100, F-8207 and F-8207J
POWER DIODES
PLATE AMPERES
110
100
90
80
70
60
50
40
30
20
10
0
1
2
3
4
5
6
7
8
9
PLATE KILOVOLTS
PLATE AMPERES
20
18
16
14
12
10
8
6
4
2
0
100
200
300
400
500
600
700
PLATE VOLTS

3-62

Color Code

Fil. Term. - Yellow
Fil. C. Term. - Red

This tube type is available on request with 1/2" wide flexible copper leads, 6" long.

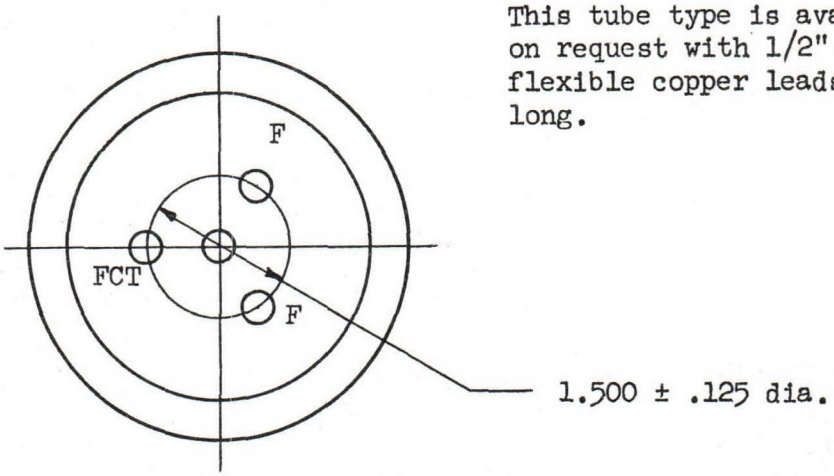

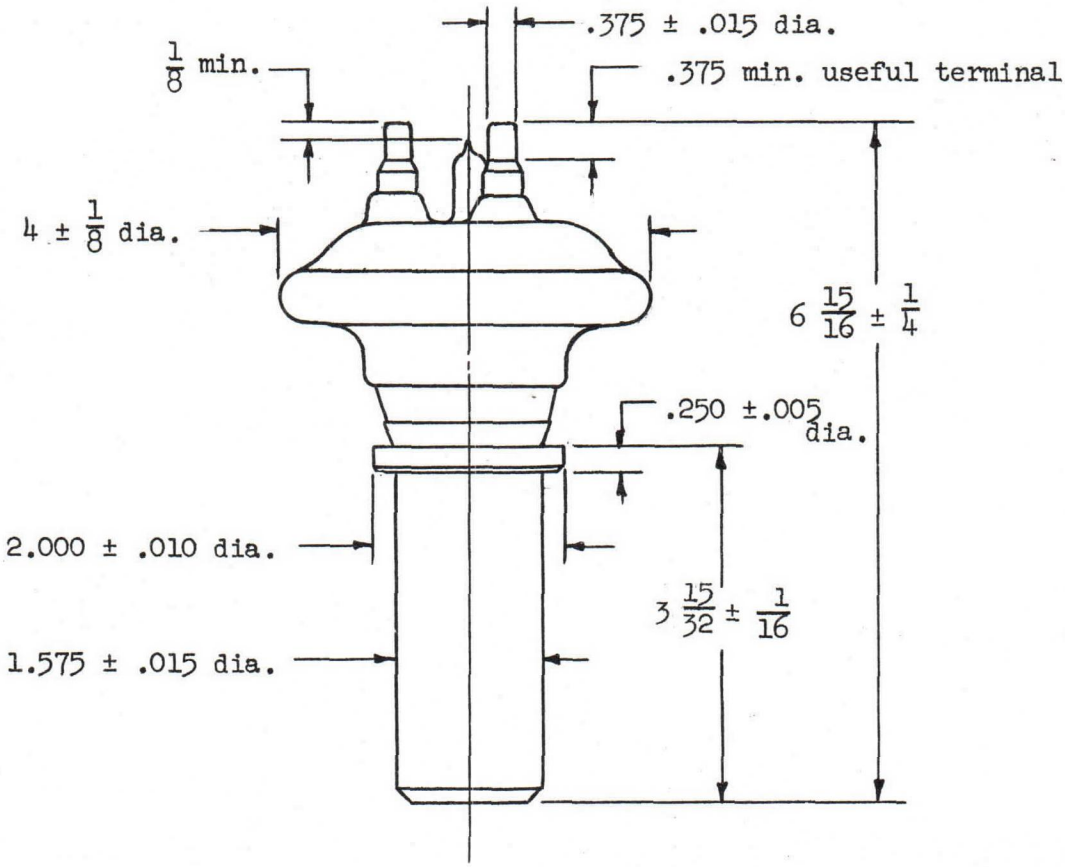

OUTLINE
F-8207 POWER DIODE

Color Code

Fil. Term. - Yellow
Fil. C. Term. - Red

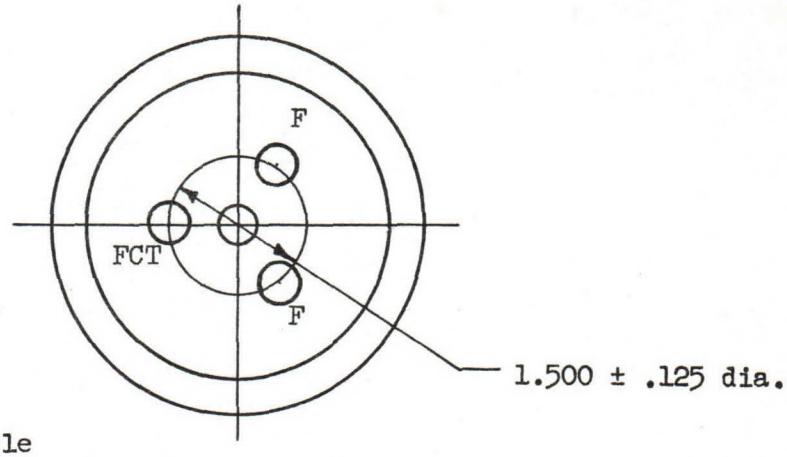

This tube type is available on request with 1/2" wide flexible copper leads, 6" long.

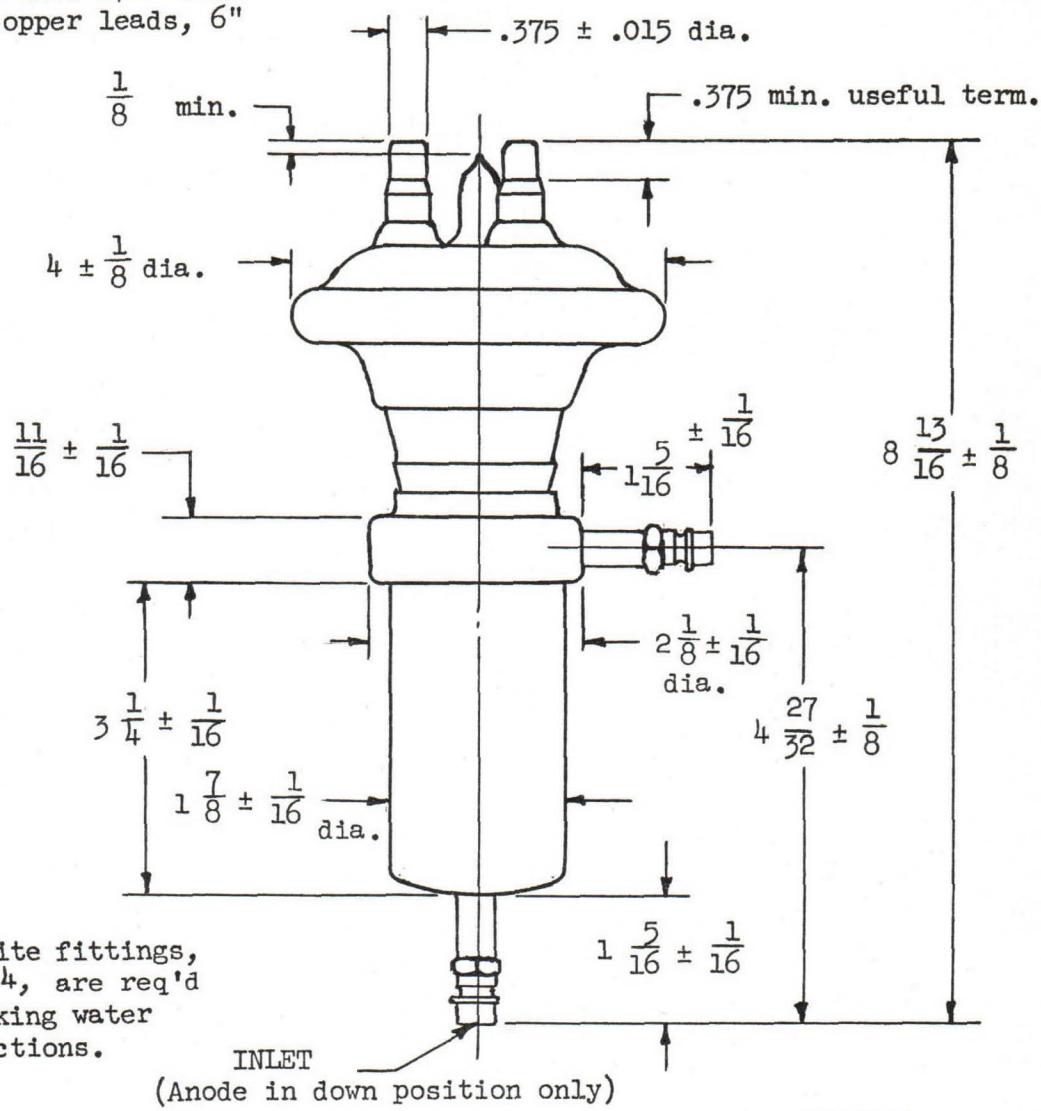

NOTE-Snaptite fittings, BPHC-4, are req'd in making water connections.

OUTLINE
F-8207J POWER DIODE