* F-8104 AND F-8104-J POWER TRIODES

DESCRIPTION:

THE F-8104 AND F-8104-J ARE TRIODES DESIGNED FOR USE AS R-F AMPLIFIERS AND OSCILLATORS. THE ANODE IS WATER COOLED AND 8 KILOWATTS OF POWER MAY BE DISSIPATED DURING CONTINUOUS COMMERCIAL SERVICE. THE F-8104-J IS PROVIDED WITH AN INTEGRAL WATER JACKET ATTACHED TO THE TUBE.

ELECTRICAL:

FILAMENT VOLTAGE	15	VOLTS
FILAMENT CURRENT	36	AMPERES
AMPLIFICATION FACTOR	25	
DIRECT INTER-ELECTRODE CAPACITANCE		
GRID-PLATE	14.2	UUF
GRID-FILAMENT	16.3	UUF
PLATE-FILAMENT	1.9	UUF

MECHANICAL:

MOUNTING POSITION	VERTICAL, ANODE UP OR DOWN	
TYPE OF COOLING	CIRCULATING WATER	
ANODE WATER FLOW REQUIRED	3.5	GPM
WATER PRESSURE, MAXIMUM	80	PSI
OUTLET WATER TEMPERATURE, MAXIMUM	70	°C
MAXIMUM GLASS TEMPERATURE	180	°C
NET WEIGHT, APPROXIMATE	1-1/4	LBS.

* FORMERLY D-1040 AND D-1040-J

MAXIMUM RATING AND TYPICAL OPERATING CONDITIONS:

R-F POWER AMPLIFIER AND OSCILLATOR - CLASS C
(KEY DOWN CONDITIONS PER TUBE WITHOUT AMPLITUDE MODULATION)

MAXIMUM RATINGS, ABSOLUTE VALUES:

	2 MC TO 30 MC	BELOW 2 MC	
D-C PLATE VOLTAGE *	6.0	8.0	MAX. KV
D-C GRID VOLTAGE	-1500	-1500	MAX. KV
D-C PLATE CURRENT	2.2	2.5	MAX. AMPERES
D-C GRID CURRENT	.300	.300	MAX. AMPERES
PLATE INPUT	12	18	MAX. KW
PLATE DISSIPATION	8	8	MAX. KW

TYPICAL OPERATION:

D-C PLATE VOLTAGE	5.5	7.5	KV
D-C GRID VOLTAGE	-600	-800	VOLTS
PEAK R-F GRID VOLTAGE	1300	1600	VOLTS
D-C PLATE CURRENT	2.0	2.4	VOLTS
D-C GRID CURRENT, APPROXIMATE	.17	.15	AMPERES
DRIVING POWER, APPROXIMATE	220	240	WATTS
POWER OUTPUT, APPROXIMATE	6.8	11.5	KW
R-F LOAD RESISTANCE	1175	1300	OHMS

* RECTIFIED, UNFILTERED, THREE-PHASE, HALF-WAVE PLATE SUPPLY IS ACCEPTABLE.

ADDITIONAL INFORMATION FOR SPECIFIC APPLICATIONS CAN BE OBTAINED FROM THE:

ELECTRON TUBE APPLICATIONS SECTION
ITT COMPONENTS DIVISION
POST OFFICE BOX 412
CLIFTON, NEW JERSEY

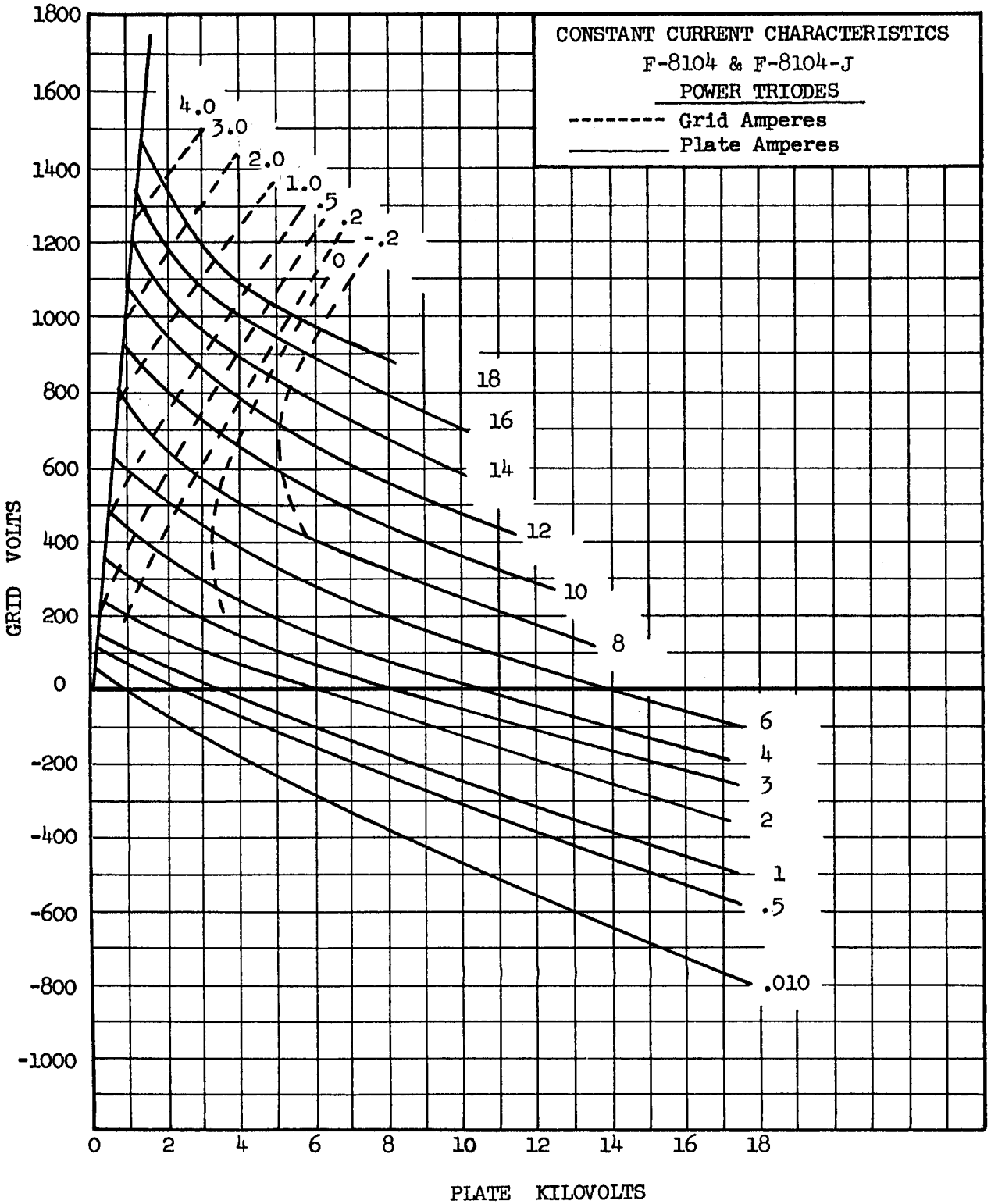
CONSTANT CURRENT CHARACTERISTICS
F-8104 & F-8104-J
POWER TRIODES
-------- Grid Amperes
_____ Plate Amperes
GRID VOLTS
PLATE KILOVOLTS
1800
1600
1400
1200
1000
800
600
400
200
0
-200
-400
-600
-800
-1000
0
2
4
6
8
10
12
14
16
18
4.0
3.0
2.0
1.0
.5
.2
0
-.2
18
16
14
12
10
8
6
4
3
2
1
.5
.010

Fil. Terminal - Yellow
Fil. Center Terminal - Red
Grid Terminal - Black

ACCESSORIES

Water Jacket
RT-53933-12 (Ordering #)
RT-54530-1 (Outline Dwg)
O-Ring
RT-53836-1 - Type "AA"

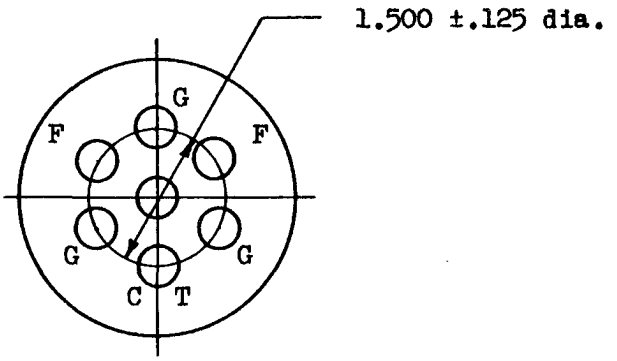

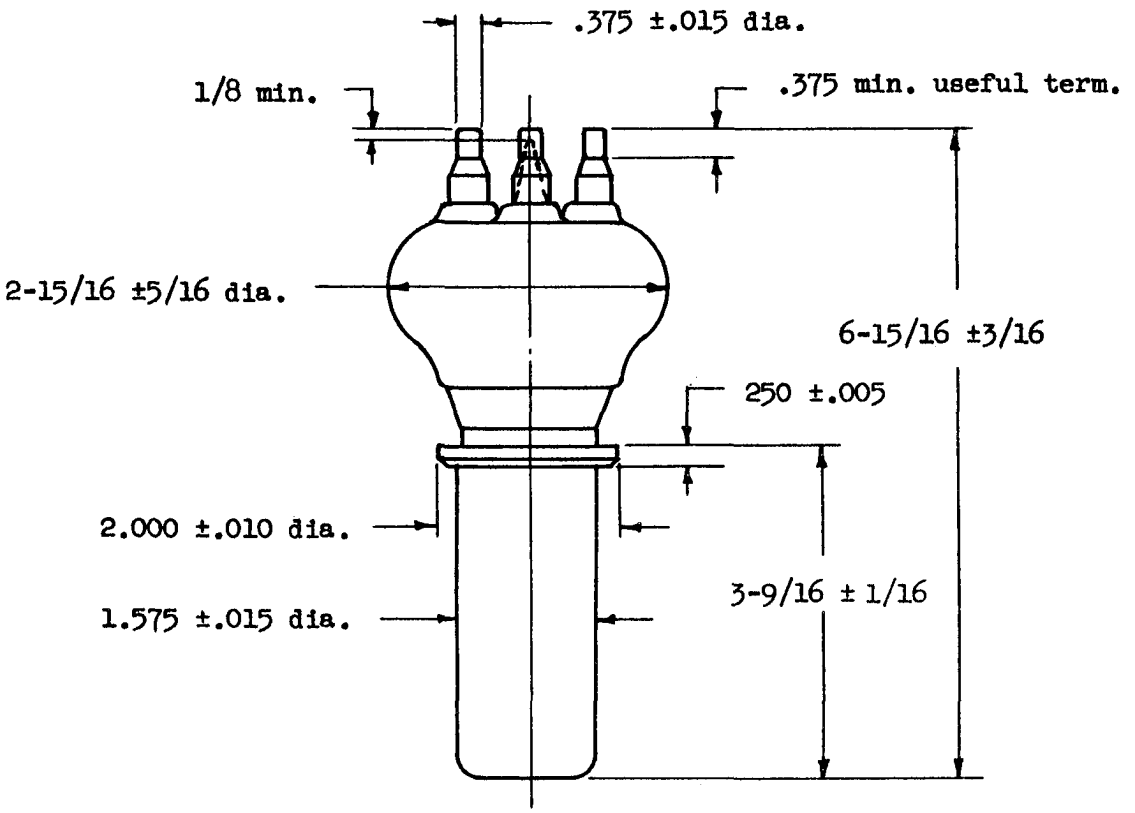

NOTE:
1/2" flexible copper lead, 6" long, available on each terminal upon request.

OUTLINE

F-8104 POWER TRIODE

Fil. Terminal - Yellow
Fil. Center Term. - Red
Grid Terminal - Black

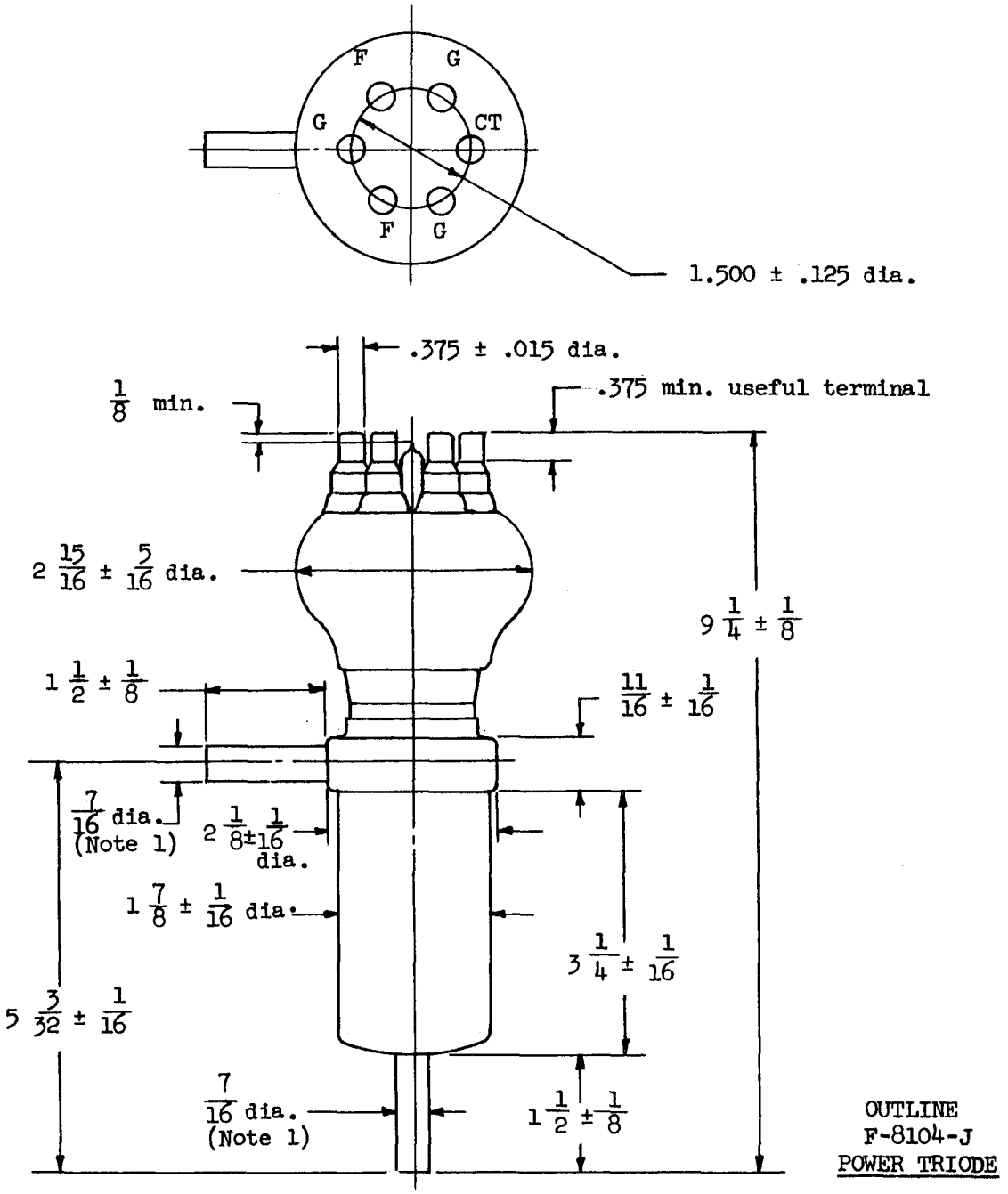

OUTLINE
F-8104-J
POWER TRIODE

Note 1: Brass compression fittings are useful in making water connections.

Note 2: 1/2" flexible copper lead, 6" long, available on each terminal upon request.