F8055

BRIGHT DISPLAY DIRECT VIEW STORAGE TUBE

The F8055 is a short-type (8" length) direct view storage tube.

The writing beam is electrostatically focused and electromagnetically deflected. The on-axis writing gun makes the tube free from geometrical distortion.

The P 20 aluminized viewing-screen of 4" diameter provides brilliant displays of information ranging from transients to half tone pictures.

The tube is designed for airborne equipments. It can be operated unpressurized at high altitude and can meet severe mechanical vibration requirements.

TYPICAL PERFORMANCES

Writing speed	>10	mm/µs
Written spot diameter	<0. 4	mm
Viewing time	>10	s
Erasing time	<0. 5	s
Brightness (screen voltage = 9 kV)	1200	Ft. Lamberts
Half tones	5	

GENERAL CHARACTERISTICS

Electrical

Flood and write guns :		
Heater voltage	6. 3	V
Flood heater current	0. 8	A
Write heater current	0. 6	A
Write gun :		
Focusing method	electrostatic	
Deflection method	electromagnetic	
Number of writing gun	1	

Optical

Phosphor :	
Type	P 20 aluminized
Fluorescence	Yellow - green
Phosphorescence	Yellow - green
Faceplate	Flat

Mechanical

Minimum useful viewing diameter	4"
Mounting position	any
Dimensions	see drawing

THOMSON-CSF
GROUPEMENT TUBES ELECTRONIQUES

OPERATING CONDITIONS

Absolute ratings

FLOODING GUN

Unless otherwise stated, voltages are given with respect to cathode k' i.e. to ground

Heater f' voltage	5.7 to 6.9	V
Cathode k' voltage (grounded)	0	V
Grid g'1 voltage (control grid or Wehnelt)	−200	V
Grid g'2 voltage (accelerating electrode)	200	V
Grid g'4 voltage (collimating electrode)	50	V
Grid g''5 voltage (uniformity electrode)	20	V
Grid g'5 voltage (collecting electrode)	600	V
Grid g'6 voltage (backing electrode)	20	V
Viewing screen g'7 voltage	9	kV

WRITING GUN

Unless otherwise stated, voltages are given with respect to cathode k

Heater f voltage	5.7 to 6.9	V
Cathode k voltage w.r.t. ground	−2.9	kV
Grid g1 voltage (control grid or Wehnelt)	−200	V
Grid g2 voltage (first accelerating electrode)	2.9	kV
Grid g3 voltage (focusing electrode)	500	V
Grid g4 voltage (second accelerating electrode)	connected to g'4	

Typical operation

FLOODING GUN

Unless otherwise stated, voltages are given with respect to cathode k' i.e. to ground

Heater f' voltage		6.3	V
Heater f' current		0.8	A
Cathode k' voltage (grounded)		0	V
Grid g'1 voltage	adjust	0 to −50	V
Grid g'2 voltage	"	50 to 80	V
Grid g'4 voltage	"	0 to 10	V
Grid g''5 voltage	"	0 to 10	V
Grid g'5 voltage	"	200 to 300	V
Grid g'6 voltage	"	−10 to +10	V
Viewing screen g'7 voltage	"	6 to 9	kV

WRITING GUN

Unless otherwise stated, voltages are given with respect to cathode k

Heater f voltage		6.3	V
Heater f current		0.6	A
Cathode k voltage w.r.t. ground		−1200	V
Grid g1 voltage	adjust	0 to −100	V
Grid g2 voltage		600	V
Grid g3 voltage	adjust	−100 to +100	V
Grid g4 voltage		connected to g'4	

PHYSICAL DESCRIPTION AND OPERATING PRINCIPLE

The F8055 consists of four basic assemblies :

1 - The storage unit
the components of which are a collector electrode and a fine metallic mesh called the backing electrode on which is deposited a dielectric material.

2 - The viewing screen
made of aluminized P 20 phosphor, provides the visual output.

3 - The writing gun
located in the neck of the tube generates fast electrons. The high velocity beam scans the storage surface and creates a charge pattern by secondary emission from the dielectric material.
Electrostatic focusing and electromagnetic deflection are employed.

4 - The flooding gun
composed of four elements and an additionnal uniformity grid produces a wide angle low electron beam which approaches the storage mesh normally and at a constant current density over the useful area.

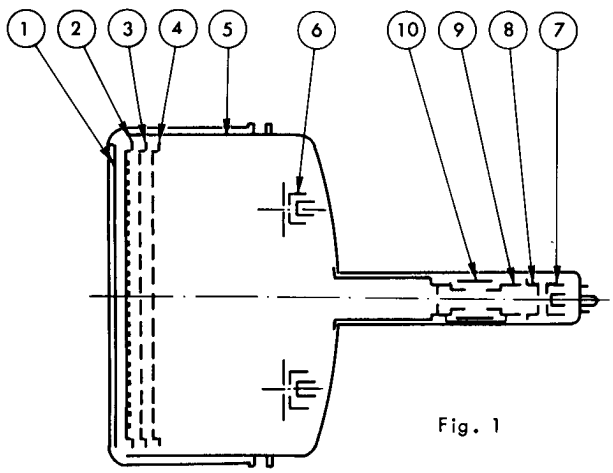

Fig. 1

1 - Screen	View screen	
2 - g'6	Backing electrode	
3 - g'5	Collecting electrode	
4 - g''5	Uniformity electrode	
5 - g'4	Collimating electrode	
6 - f' k' g'1 g'2	Flood guns	
7 - f k g1	Heater, cathode, Wehnelt	Writing gun
8 - g2	First accelerating electrode	Writing gun
9 - g4	Second accelerating electrode	Writing gun
10 - g3	Focusing electrode	Writing gun

In the unwritten state, the dielectric surface of the backing electrode is negatively charged and the low energy flood electrons issued from the flood gun are repelled back to the collecting electrode.

In writing operation, the writing gun scans the storage surface and creates positive charges pattern by secondary emission of the dielectric material, the secondary electrons being attracted to the collecting electrode.

Low velocity electrons from the flood gun approach the storage surface normally and flood the entire useful area. They penetrate through the backing electrode in areas where pattern has been written and are then accelerated to the viewing screen where they produce a corresponding picture on the phosphor screen.

Since the number of electrons passing through the backing electrode is determined by the amount of written charges, intermediate gray shades may be reproduced.

ERASING

Erasing a written signal by making the potential of the insulating surface uniform can be obtained by raising the backing electrode for a fraction of a second to a potential higher by a few volts than its working potential.

Continuous erasure is obtained by applying positive pulse train on the backing electrode as defined in fig. 2.

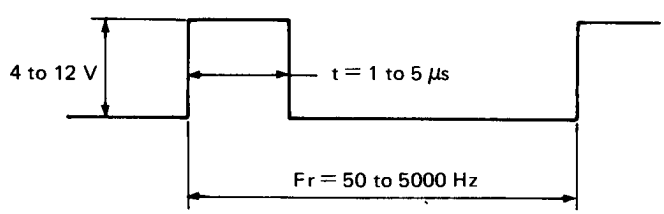

Fig. 2

THOMSON-CSF
GROUPEMENT TUBES ELECTRONIQUES

OPERATING INSTRUCTIONS

SET UP INSTRUCTIONS

a - Voltages should be applied on flood gun electrodes, storage unit and viewing screen after 30 s minimum preheating time of the heaters.

All the voltages applied to the g'2, g'4. g''5 and g'5 electrodes can be adjusted. However in order to reduce the number of combinations it is advisable to fix the voltages of g'1, g'2, g'5 and g'6.

For example : Vg'1 = 0 V - Vg'2 = 60 V - Vg'5 = 200 V - Vg'6 = 2 V

Adjust then Vg'4 and Vg''5 to achieve optimum uniformity.

b - Make sure that the control grid of the writing gun is at cut off potential before application of voltages to the writing gun electrodes.

The writing gun can not be allowed to write with a too high beam intensity otherwise the storage surface may be damaged

IMPORTANT RECOMMENDATIONS

1 - The writing gun cathode is at a high D.C. potential. The insulation of the heater transformer with have to be designed to suit since the heater-cathode insulation is insufficient to withstand this voltage. When the heater can not be connected to the cathode, care should be taken to ensure that the maximum allowed voltage between heater and cathode is not exceeded.

2 - A magnetic shield is necessary to protect the tube from stray magnetic field altering the trajectories of low velocity electron beam. A high permeability (mumetal) cylindrical shield of about 1 mm thick surrounding the tube throughout its length from the screen to the base will be suitable.

3 - It is imperative to handle and transport the tube with its screen upwards to prevent particles falling on the storage element.

OUTLINE DRAWING

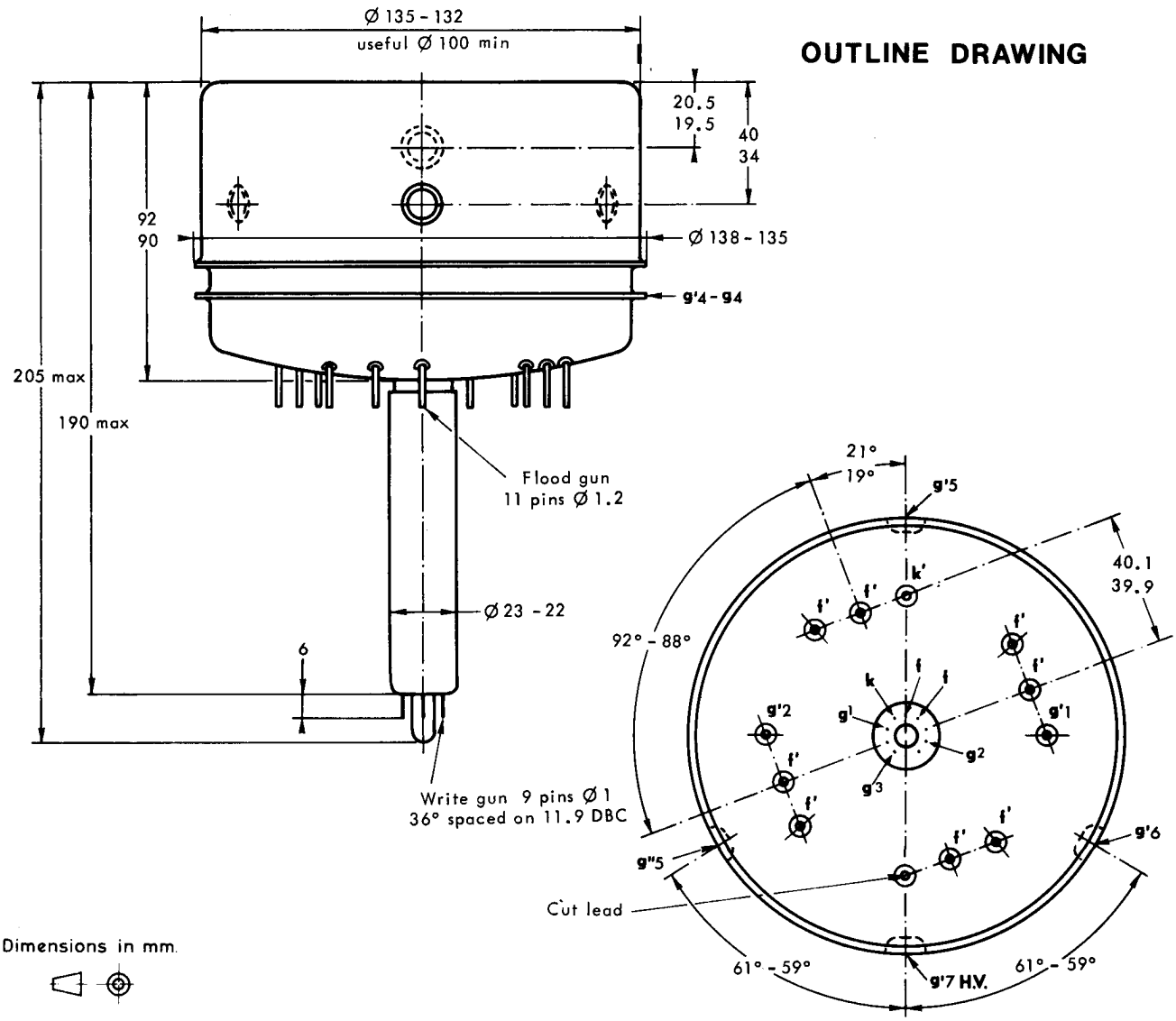

Dimensions in mm.