F 8036
BRIGHT DISPLAY DIRECT VIEW STORAGE TUBE

The F 8036 is a direct view storage tube including two writing guns permitting simultaneous writing of two signals. Electrostatic focusing and deflection are utilized.

Performances include good resolution, bright and uniform display over the entire 3.6" diameter screen. It is designed to provide brilliant displays of information ranging from transients to half-tone pictures.

The F 8036 is particulary suitable for such applications as airborne fire control radar, weather radar, transient studies and is recommended for applications where vibrations and low pressure conditions are encountered.

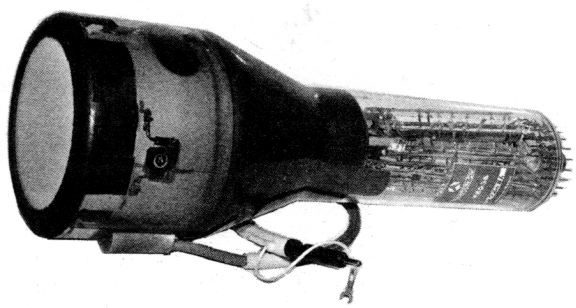

TYPICAL PERFORMANCES

Writing speed	>5	mm/µs
Written spot diameter	0.5	mm
Viewing time	>10	s
Erasing time	<0.5	s
Brightness (screen voltage = 10 kV)	>1600	Ft. Lamberts
Half tones	5	

GENERAL CHARACTERISTICS

Electrical

Flood and write guns :		
Heater voltage	6.3	V
Heater current	0.6	A
Write gun :		
Focusing method	Electrostatic	
Deflection method	Electrostatic	
Number of writing gun	2	
Interelectrode capacitance :		
Writing gun cathode k to all internal elements	<10	pF
Writing gun grid g1 to all internal elements	<10	pF

Optical

Phosphor :	
Type	P 20 aluminized
Fluorescence	Yellow Green
Phosphorescence	Yellow Green
Faceplate	Flat

THOMSON-CSF
GROUPEMENT TUBES ELECTRONIQUES

Mechanical

Minimum useful viewing diameter	3.6"
Mounting position	Any
Dimensions	See drawing

OPERATING CONDITIONS

Absolute ratings

Unless otherwise stated, voltages are given with respect to ground.

FLOODING GUN

Heater f' voltage	5.7	to	6.9	V
Cathode k' voltage			0	V
Grid g'1 voltage (control grid or Wehnelt)			– 200	V
Grid g'2 voltage (accelerating electrode)			200	V
Grid g'3 voltage (first collimating electrode)			200	V
Grid g'4 voltage (second collimating electrode)			300	V
Grid g'5 voltage (collecting electrode)			300	V
Grid g'6 voltage (backing electrode)			20	V
Viewing screen g'7 voltage			11	kV

WRITING GUNS

Heater f voltage	5.7	to	6.9	V
Cathode k voltage			– 2.9	kV
Grid g1 voltage (control grid or Wehnelt) w.r.t. k	0	to	– 200	V
Grids g2 and g4 voltage (accelerating electrodes)			Connected to g'2	
Grid g3 voltage (focusing electrode) w.r.t. k			1.2	kV

Typical operation

Unless otherwise stated, voltages are given with respect to ground.

FLOODING GUN

Cathode k' voltage			0	V
Grid g'1 voltage	adjust 0	to	–150	V
Grid g'2 voltage			100	V
Grid g'3 voltage	adjust 20	to	40	V
Grid g'4 voltage	adjust 40	to	100	V
Grid g'5 voltage			210	V
Grid g'6 voltage			2	V
Viewing screen g'7 voltage			10	kV

WRITING GUNS

Cathode k voltage			– 2	kV
Grid g1 voltage (max. for cut-off) w.r.t. k			– 90	V
Grids g2 and g4 voltage			Connected to g'2	
Grid g3 voltage w.r.t. k	adjust 400	to	600	V

PHYSICAL DESCRIPTION AND OPERATING PRINCIPLE

The F8036 consists of four basic assemblies :

1 - The storage unit
the components of which are a collector electrode and a fine metallic mesh called the backing electrode on which is deposited a dielectric material.

2 - The viewing screen
made of aluminized P 20 phosphor, provides the visual output.

3 - Two writing guns
located in the neck of the tube generate fast electrons. The high velocity beams scan the storage surface and create a charge pattern by secondary emission from the dielectric material.
Electrostatic focusing and deflection are employed.

4 - The flooding gun
does not scan the screen but produces a wide angle low velocity electron beam which approaches the storage mesh normally and at a constant current density over the useful area owing to the collimation electrodes.

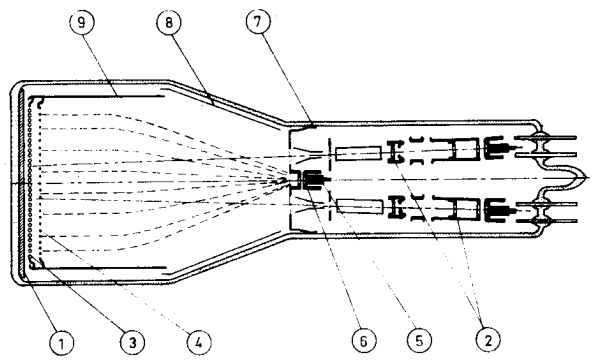

1 - View screen
2 - Write guns
3 - g'6 (backing electrode)
4 - g'5 (collecting electrode)
5 and 6 - Flood gun
7 - g'2 (accelerating electrode)
8 - g'3 (1st collimating electrode)
9 - g'4 (2nd collimating electrode)

In the unwritten state, the dielectric surface of the backing electrode is negatively charged and the low energy flood electrons issued from the flood gun are repelled back to the collecting electrode.

In writing operation, the writing guns scan the storage surface and create positive charges pattern by secondary emission of the dielectric material, the secondary electrons being attracted to the collecting electrode.

Low velocity electrons from the flood gun approach the storage surface normally and flood the entire useful area. They penetrate through the backing electrode in area where pattern has been written and are then accelerated to the viewing screen where they produce a corresponding picture on the phosphor screen.

Since the number of electrons passing through the backing electrode is determined by the amount of written charges, intermediate gray shades may be reproduced.

The image can be erased by applying a small positive pulse to the backing electrode. The display decay may be controlled by varying duration, amplitude and rate of continuous series of positive pulses.

OPERATIONAL RECOMMENDATIONS

1 - The writing guns can not be allowed to write continuously without appropriate erasure otherwise the storage surface may be damaged.

2 - Magnetic shield is necessary to prevent stray magnetic fields altering the trajectories of low velocity flood beam.

3 - The tube should be handled screen upwards to avoid particles falling on the storage elements.

THOMSON-CSF
GROUPEMENT TUBES ELECTRONIQUES

OUTLINE DRAWING

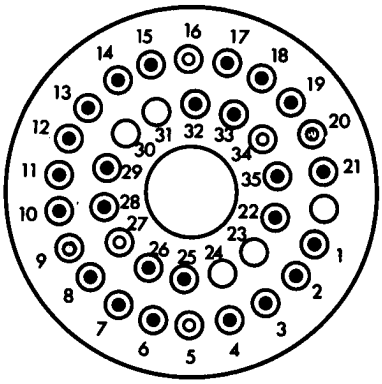

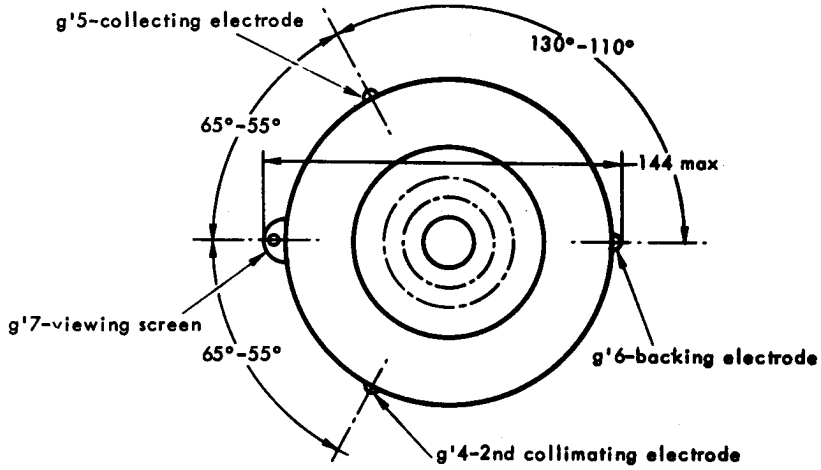

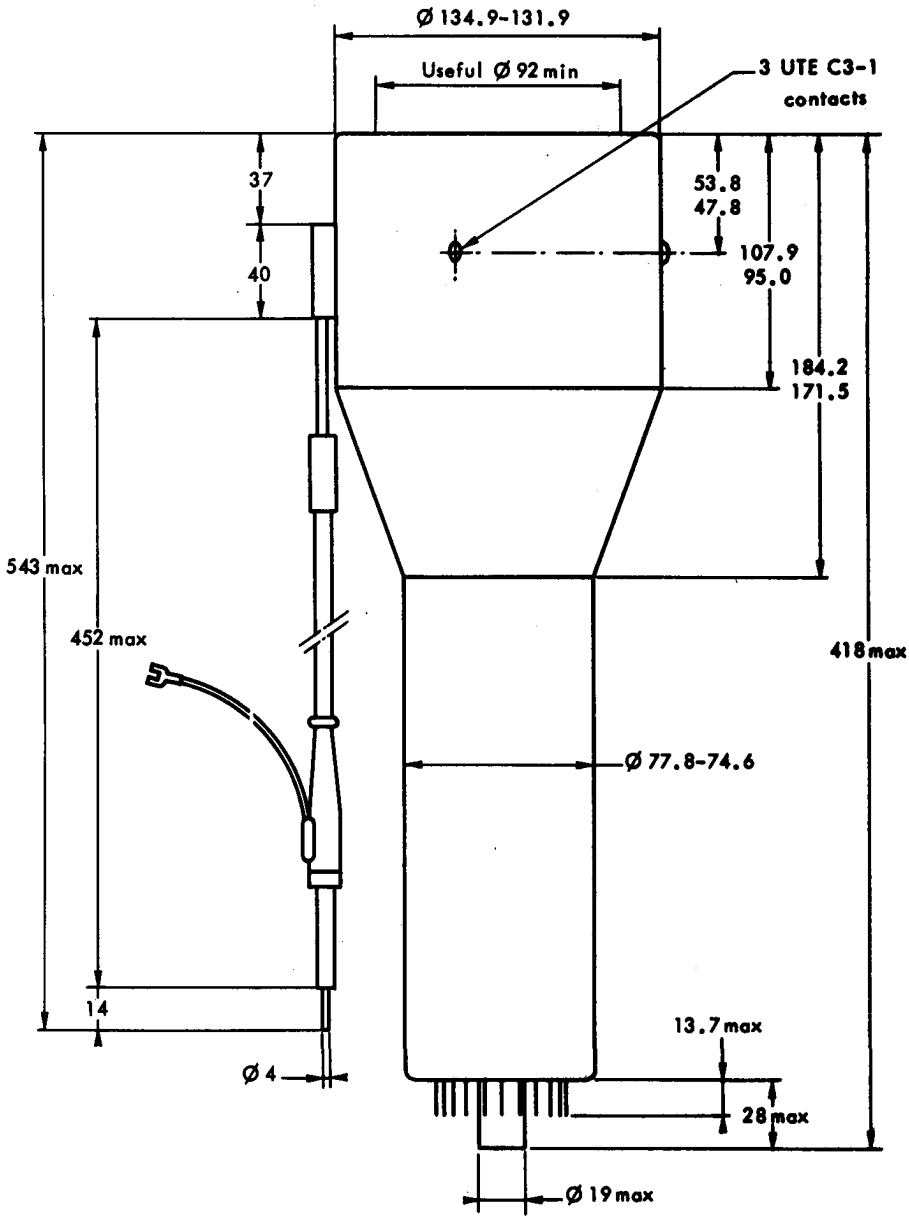

BASING DIAGRAM		
-	-	Index
1	f'	Flood gun heater
2	k'	Flood gun cathode
3	x1	Horizontal deflection plate (a)
4	x2	Horizontal deflection plate (a)
5	-	No connection
6	g3	Writing gun focusing electrode (a)
7	g1	Writing gun control electrode (a)
8	f	Writing gun heater (a)
9	-	No connection
10	y1	Vertical deflection plate (a)
11	g2+g4+g'2	Writing and flood guns accelerating electrodes
12	g'3	1st collimating electrode
13	-	Internal connection
14	x1	Horizontal deflection plate (b)
15	x2	Horizontal deflection plate (b)
16	-	No connection
17	g3	Writing gun focusing electrode (b)
18	g1	Writing gun control electrode (b)
19	f	Writing gun heater (b)
20	-	No connection
21	y1	Vertical deflection plate (b)
22	f'	Flood gun heater
23	-	No pin
24	-	No pin
25	k	Writing gun cathode (a)
26	f	Writing gun heater (a)
27	-	No connection
28	y2	Vertical deflection plate (a)
29	g'1	Flood gun control electrode
30	-	No pin
31	-	No pin
32	k	Writing gun cathode (b)
33	f	Writing gun heater (b)
34	-	No connection
35	y2	Vertical deflection plate (b)

NOTA : Suffixes (a) and (b) indentify constitutive elements of each writing gun.

Dimensions in mm.