F 8029
BRIGHT DISPLAY DIRECT VIEW STORAGE TUBE

The F8029 is an electrostatic focus and deflection direct view storage tube capable of providing bright, uniform display over a 3.6" diameter screen. It is intended for direct study of fast transient or random phenomena with a controllable image retention.

Applications include fire control radar, airborne radar displays for weather and navigational purposes, transient studies.

The tube is specially designed for airborne equipment and can be operated unpressurized at high altitude. The rugged structure makes it particularly resistant to vibration.

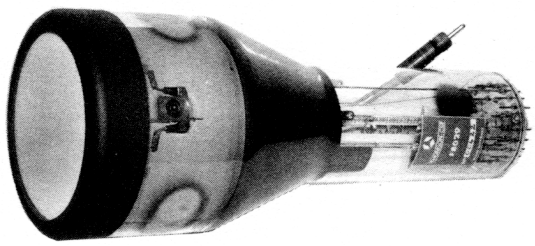

TYPICAL PERFORMANCES

Writing speed	>5	mm/µs
Written spot diameter	0.5	mm
Viewing time	>10	s
Erasing time	<0.5	s
Brightness (screen voltage = 10 kV)	>1600	Ft. Lamberts
Half tones	5	

GENERAL CHARACTERISTICS

Electrical

Flood and write guns :		
Heater voltage	6.3	V
Heater current	0.6	A
Write gun :		
Focusing method	Electrostatic	
Deflection method	Electrostatic	
Number of writing gun	1	
Interelectrode capacitance :		
Writing gun cathode k to all internal elements	<10	pF
Writing gun grid g1 to all internal elements	<10	pF

Optical

Phosphor :	
Type	P 20 aluminized
Fluorescence	Yellow - green
Phosphorescence	Yellow - green
Faceplate	Flat

THOMSON-CSF
GROUPEMENT TUBES ELECTRONIQUES

Mechanical

Minimum useful viewing diameter	3.6"
Mounting position	any
Dimensions	see drawing

OPERATING CONDITIONS

Absolute ratings

Unless otherwise stated, voltages are given with respect to ground.

FLOODING GUN

Heater f' voltage	5.7	to	6.9	V
Cathode k' voltage			0	V
Grid g'1 voltage (control grid or Wehnelt)			−200	V
Grid g'2 voltage (accelerating electrode)			200	V
Grid g'3 voltage (first collimating electrode)			200	V
Grid g'4 voltage (second collimating electrode)			300	V
Grid g'5 voltage (collecting electrode)			300	V
Grid g'6 voltage (backing electrode)			20	V
Viewing screen g'7 voltage			11	kV

WRITING GUN

Heater f voltage	5.7	to	6.9	V
Cathode k voltage			−2.9	kV
Grid g1 voltage (control grid or Wehnelt) w,r.t.k.	0	to	−200	V
Grids g2 and g4 voltage (accelerating electrodes)		connected to g'2		
Grid g3 voltage (focusing electrode) w.r.t.k.			1.2	kV

Typical operation

Unless otherwise stated, voltages are given with respect to ground.

FLOODING GUN

Cathode k' voltage				0	V
Grid g'1 voltage	adjust	0	to	−150	V
Grid g'2 voltage				100	V
Grid g'3 voltage	adjust	20	to	40	V
Grid g'4 voltage	adjust	40	to	100	V
Grid g'5 voltage				210	V
Grid g'6 voltage				2	V
Viewing screen g'7 voltage				10	kV

WRITING GUN

Cathode k voltage				− 2	kV
Grid g1 voltage (max. for cut-off) w.r.t.k.				−90	V
Grids g2 and g4 voltage			connected to g'2		
Grid g3 voltage w.r.t.k.	adjust	400	to	600	V

PHYSICAL DESCRIPTION AND OPERATING PRINCIPLE

The F8029 consists of four basic assemblies :

1 - The storage unit
the components of which are a collector electrode and a fine metallic mesh called the backing electrode on which is deposited a dielectric material.

2 - The viewing screen
made of aluminized P 20 phosphor, provides the visual output.

3 - The writing gun
located in the neck of the tube generates fast electrons. The high velocity beam scans the storage surface and creates a charge pattern by secondary emission from the dielectric material.
Electrostatic focusing and deflection are employed.

4 - The flooding gun
does not scan the screen but produces a wide angle low velocity electron beam which approaches the storage mesh normally and at a constant current density over the useful area owing to the collimation electrodes.

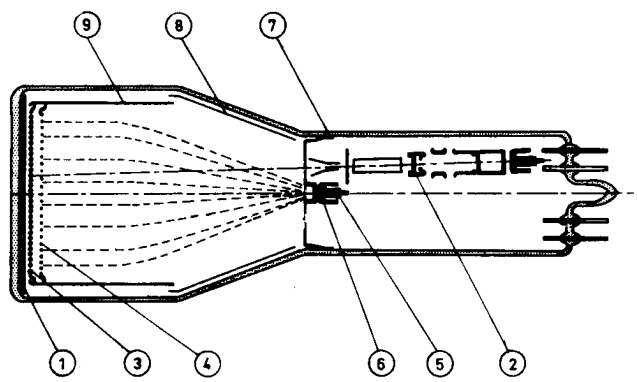

1 - View screen
2 - Write gun
3 - g'6 (backing electrode)
4 - g'5 (collecting electrode)
5 and 6 - Flood gun
7 - g'2 (accelerating electrode)
8 - g'3 (1st collimating electrode)
9 - g'4 (2nd collimating electrode)

In the unwritten state, the dielectric surface of the backing electrode is negatively charged and the low energy flood electrons issued from the flood gun are repelled back to the collecting electrode.

In writing operation, the writing gun scans the storage surface and creates positive charges pattern by secondary emission of the dielectric material, the secondary electrons being attracted to the collecting electrode.

Low velocity electrons from the flood gun approach the storage surface normally and flood the entire useful area. They penetrate through the backing electrode in areas where pattern has been written and are then accelerated to the viewing screen where they produce a corresponding picture on the phosphor screen.

Since the number of electrons passing through the backing electrode is determined by the amount of written charges, intermediate gray shades may be reproduced.

The image can be erased by applying a small positive pulse to the backing electrode. The display decay may be controlled by varying duration, amplitude and rate of continuous series of positive pulses.

OPERATIONAL RECOMMENDATIONS

1 - The writing gun can not be allowed to write continuously without appropriate erasure otherwise the storage surface may be damaged.

2 - Magnetic shield is necessary to prevent stray magnetic fields altering the trajectories of low velocity flood beam.

3 - The tube should be handled screen upwards to avoid particles falling on the storage elements.

THOMSON-CSF
GROUPEMENT TUBES ELECTRONIQUES

OUTLINE DRAWING

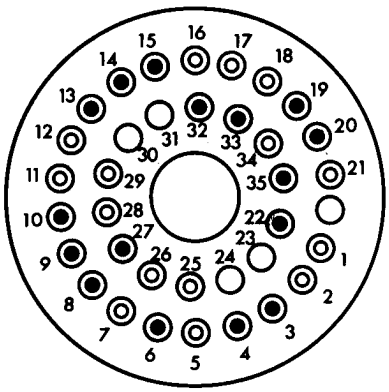

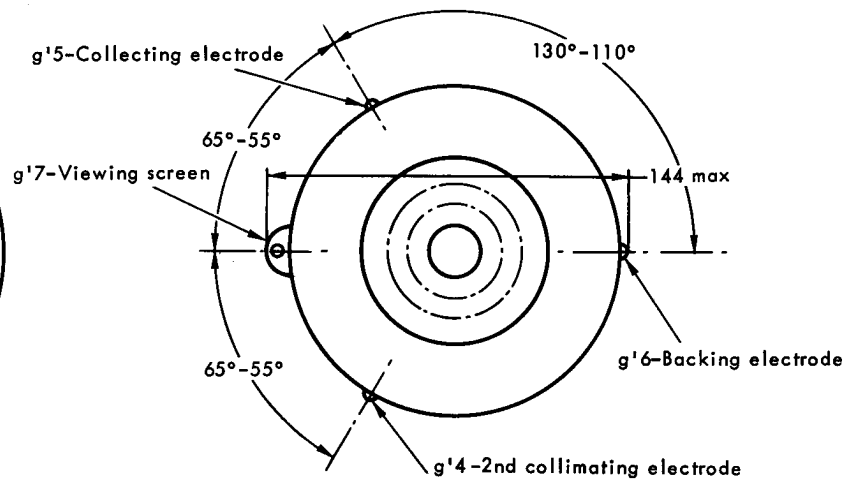

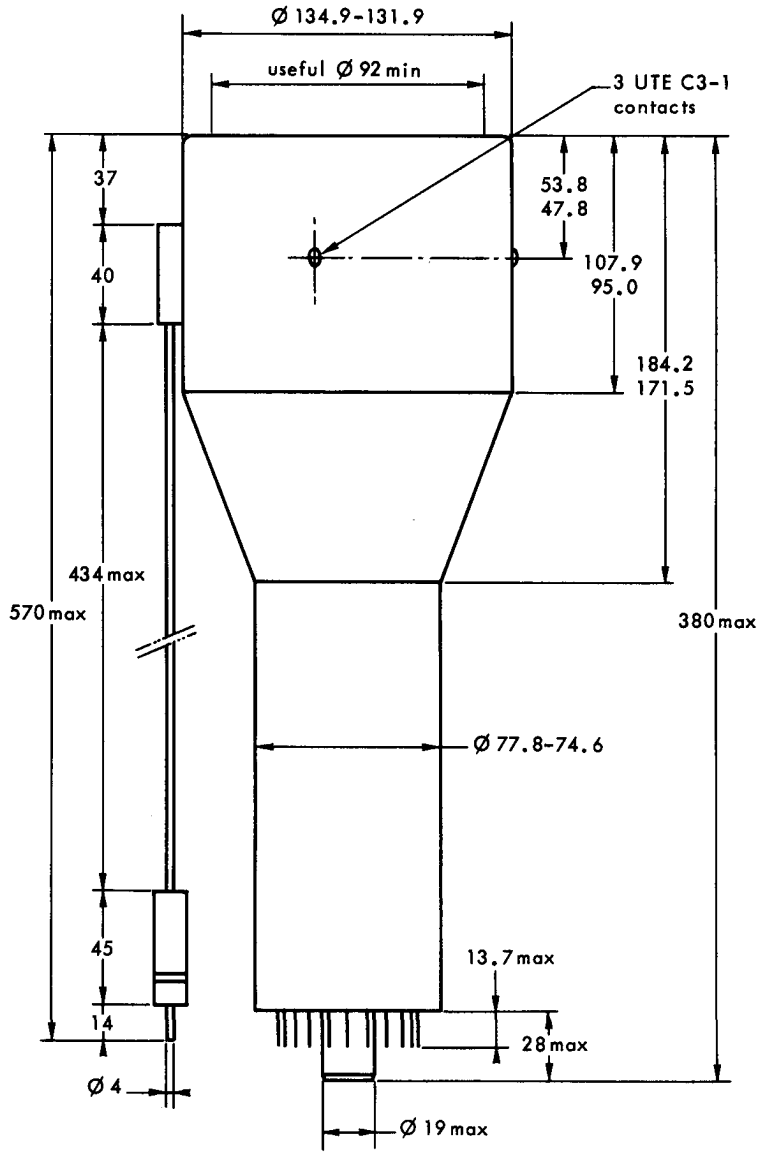

BASING DIAGRAM		
-	-	Index
1	-	No connection
2	-	No connection
3	x1	Horizontal deflection plate
4	x2	Horizontal deflection plate
5	-	No connection
6	g3	Writing gun focusing electrode
7	-	No connection
8	f	Writing gun heater
9	f	Writing gun heater
10	g1	Writing gun control electrode
11	-	No connection
12	-	No connection
13	y1	Vertical deflection plate
14	y2	Vertical deflection plate
15	g2+g4+g'2	Flood and writing guns accelerating electrodes
16	-	No connection
17	-	No connection
18	-	No connection
19	g'3	1st collimating electrode
20	-	Internal connection
21	-	No connection
22	f'	Flooding gun cathode
23	-	No pin
24	-	No pin
25	-	No connection
26	-	No connection
27	k	Writing gun cathode
28	-	No connection
29	-	No connection
30	-	No pin
31	-	No pin
32	g'1	Flooding gun control electrode
33	k'	Flooding gun cathode
34	-	No connection
35	f'	Flooding gun heater

Dimensions in mm.