DESCRIPTION

The F-6926 and F-6926-J are triodes designed for use as modulators, r-f amplifiers, and oscillators. The anodes are of heavy wall construction and are water cooled. 6 kilowatts of power may be dissipated during Continuous Commercial Service. F-6926-J is provided with an integral water jacket attached to the tube.

ELECTRICAL

Filament Voltage	13 volts
Filament Current	36 amperes
Amplification Factor	17
Direct Inter-electrode Capacitance	
Grid-Plate	20.5 μμf
Grid-Filament	18 μμf
Plate-Filament	1.9 μμf

MECHANICAL

Mounting Position	Vertical, anode down
Type of Cooling	Circulating Water
Anode Water Flow required	3.5 gpm
Water Pressure, max.	80 psi
Outlet Water Temperature, max.	70°C
Maximum Glass Temperature	180° C

MAXIMUM RATING AND TYPICAL OPERATING CONDITIONS

R-F Power Amplifier and Oscillator - Class C
(Key down conditions per tube without Amplitude Modulation)

Maximum Ratings, Absolute Values

D-C Plate Voltage	6.5 max. kv
D-C Grid Voltage	-1.2 max. kv
D-C Plate Current	2.0 max. amperes
D-C Grid Current	.250 max.amperes
Plate Input	12 max. kw
Plate Dissipation	6 max. kw

ITT COMPONENTS DIVISION
INTERNATIONAL TELEPHONE AND TELEGRAPH CORPORATION
P. O. BOX 412, CLIFTON, NEW JERSEY

F-6926
&
F-6926-J
POWER TRIODES

Typical Operation

D-C Plate Voltage	2500	4000	6000	volts
D-C Grid Voltage	-600	-800	-1000	volts
Peak R-F Grid Voltage	1050	1300	1500	volts
Peak R-F Plate Voltage	1800	3000	5000	volts
D-C Plate Current	1.27	1.6	1.6	amperes
D-C Grid Current	.233	.230	.210	amperes
Driving Power, approximate	245	300	315	watts
Power Output, approximate	2.15	4.4	7.25	kilowatts

These tube types are also available with 1/2 inch wide flexible copper leads, 6 inches long, attached two to a terminal.

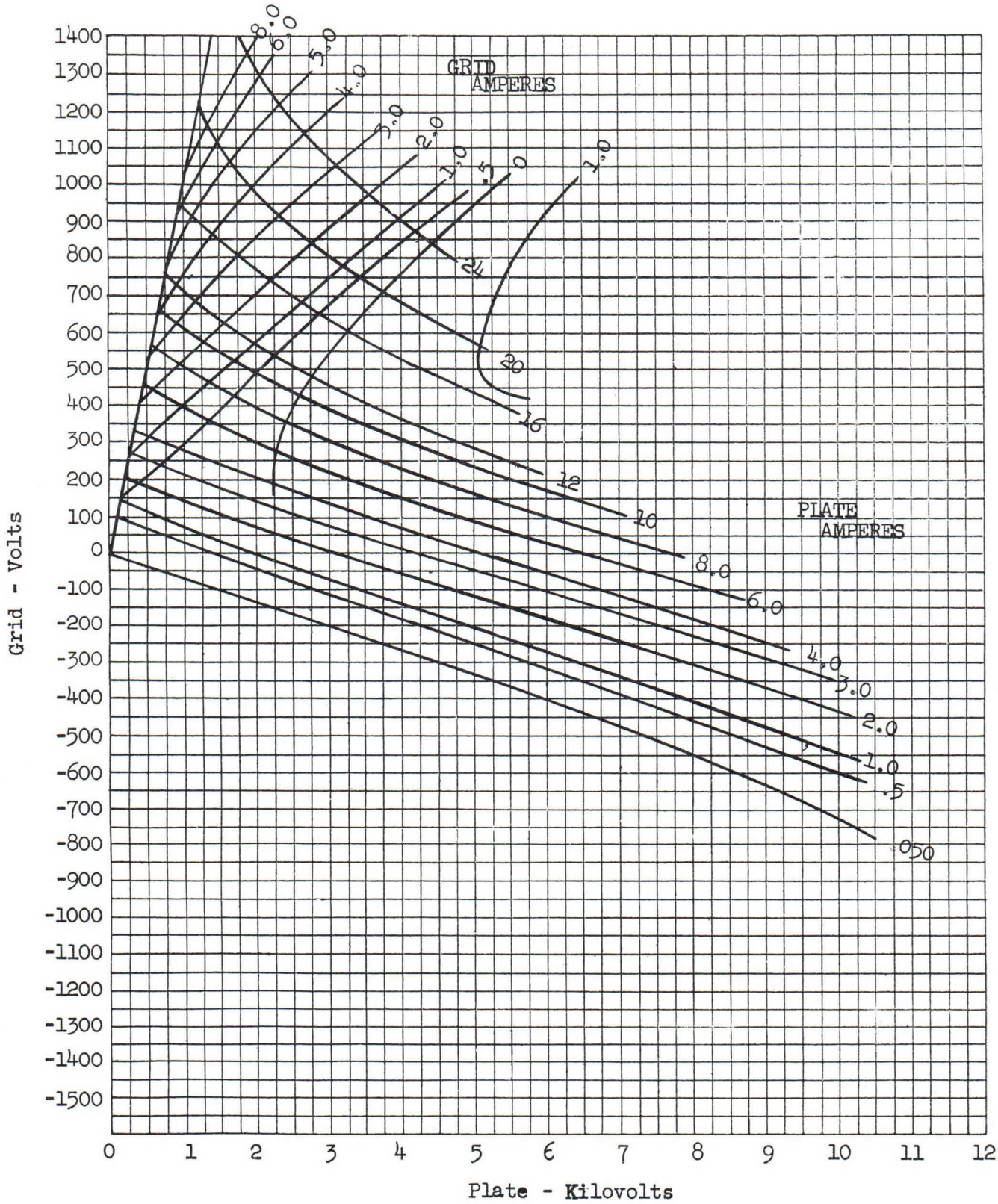

CONSTANT CURRENT CHARACTERISTICS

TYPES F-6925, F-6926 & F-6926J POWER TRIODES

ITT COMPONENTS DIVISION
INTERNATIONAL TELEPHONE AND TELEGRAPH CORPORATION
P. O. BOX 412, CLIFTON, NEW JERSEY

FIL. TERM. - YELLOW
FIL. CENT. TERM. - RED
GRID TERM. - BLACK

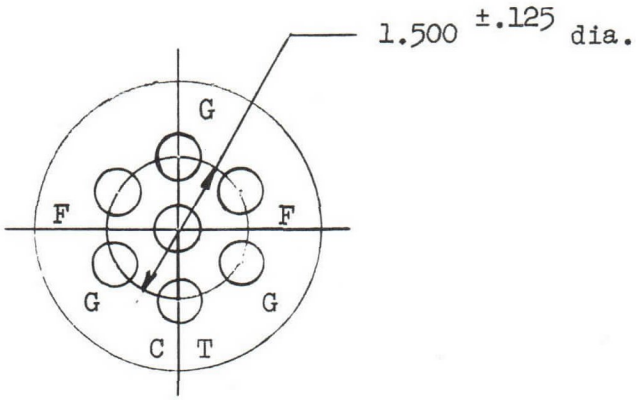

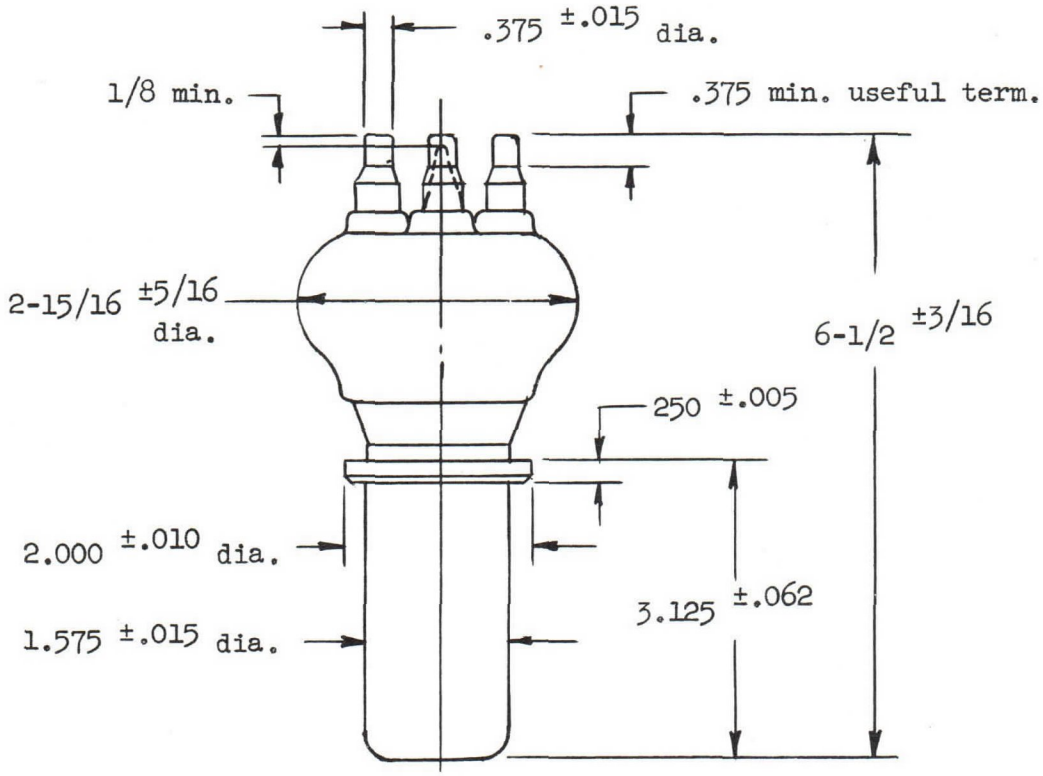

NOTE: 1/2" flexible copper lead 6" long available on each terminal upon request.

OUTLINE
F-6926 POWER TRIODE

FIL. TERM. - YELLOW
FIL. CENT. TERM. - RED
GRID TERM. - BLACK

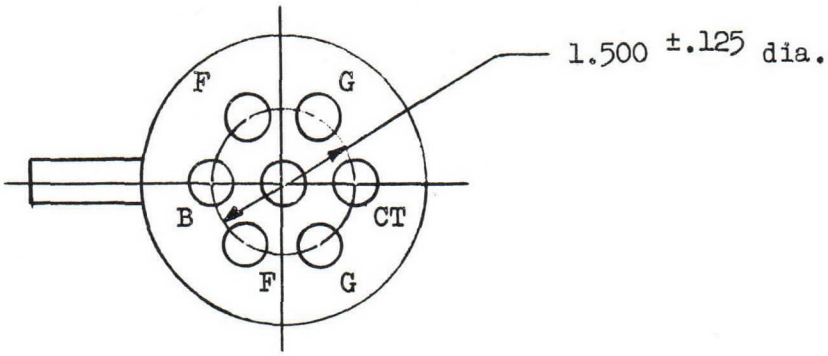

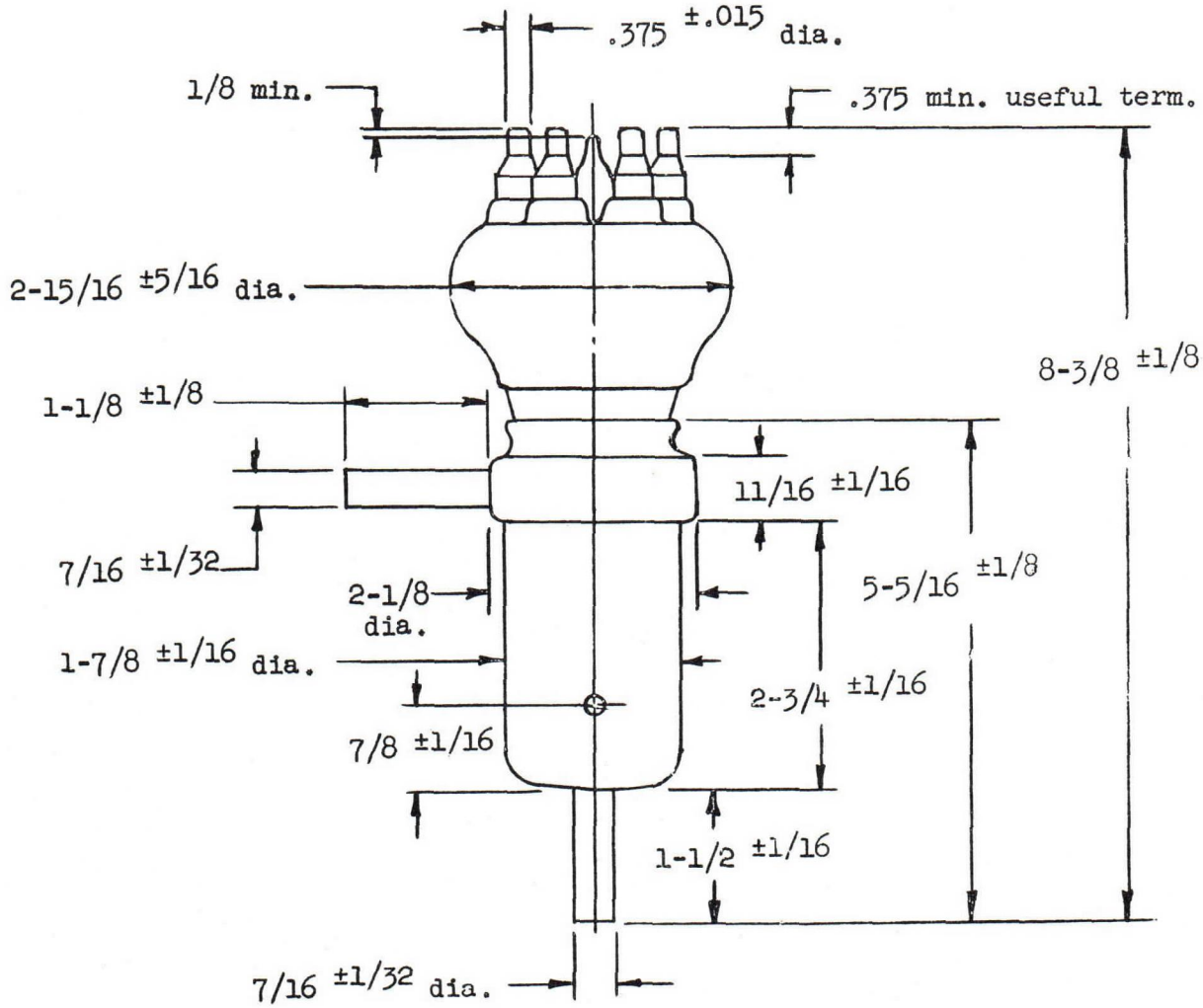

NOTE: 1/2" flexible copper lead 6" long available on each terminal upon request.

OUTLINE
F-6926-J POWER TRIODE

ITT COMPONENTS DIVISION
INTERNATIONAL TELEPHONE AND TELEGRAPH CORPORATION
P. O. BOX 412, CLIFTON, NEW JERSEY