engineering TUBE DATA

F-6921
POWER
TRIODE

ITT Components Division

DESCRIPTION

The F-6921 is a three-electrode tube designed for use as a modulator. The anode is capable of dissipating 30 kw during Continuous Commercial Service. Cooling is accomplished by circulating water. The cathode is a thoriated tungsten filament. Maximum ratings apply for audio frequency use only.

ELECTRICAL

Filament Voltage	5 volts
Filament Current	260 amperes
Amplification Factor	4.25
Inter-electrode Capacitance	
Grid-Plate	53 μμf
Grid-Filament	48 μμf
Plate-Filament	7.5 μμf

MECHANICAL

Mounting Position	Vertical, Anode Down
Type of Cooling	Water
Water Flow, minimum	30 gpm
Maximum Glass Temperature	180°C
Weight, approximate	12 lbs.

MAXIMUM RATINGS AND TYPICAL OPERATING CONDITIONS

Audio Frequency Power Amplifier and Modulator--Class AB_1

Maximum Ratings, Absolute Values

D-C Plate Voltage	15 max. kv
Maximum Signal D-C Plate Current*	10 amperes
Maximum Signal Plate Input*	60 kw
Plate Dissipation*	30 kw

*Averaged over any audio frequency cycle of sine-wave form.

ITT COMPONENTS DIVISION
INTERNATIONAL TELEPHONE AND TELEGRAPH CORPORATION
P.O. BOX 412, CLIFTON, NEW JERSEY

Typical Operation
(Unless otherwise specified, values are for two tubes)

D-C Plate Voltage	10,000 volts
D-C Grid Voltage	-2,400 volts
Peak A-F Grid-to-Grid Voltage	4,680 volts
Zero Signal D-C Plate Current	2.0 amperes
Maximum Signal D-C Plate Current	9.5 amperes
Effective Load, Resistance Plate-to-Plate	1870 ohms
Maximum Signal Driving Power	0 watts
Maximum Signal Power Output	52.5 kw

Random Noise Drive Conditions

D-C Plate Voltage	12,500 volts
D-C Grid Voltage	-3,200 volts
Peak A-F Grid-to-Grid Voltage	6,100 volts
Zero Signal D-C Plate Current	1.5 amperes
Maximum Signal D-C Plate Current	4.5 amperes
Effective Load Resistance Plate-to-Plate	7400 ohms
Maximum Signal Driving Power	0 watts
Output Crest Value	90,000 volt amperes
Duty Factor at Crest Value	.01
Load Power Factor	0 - 100%

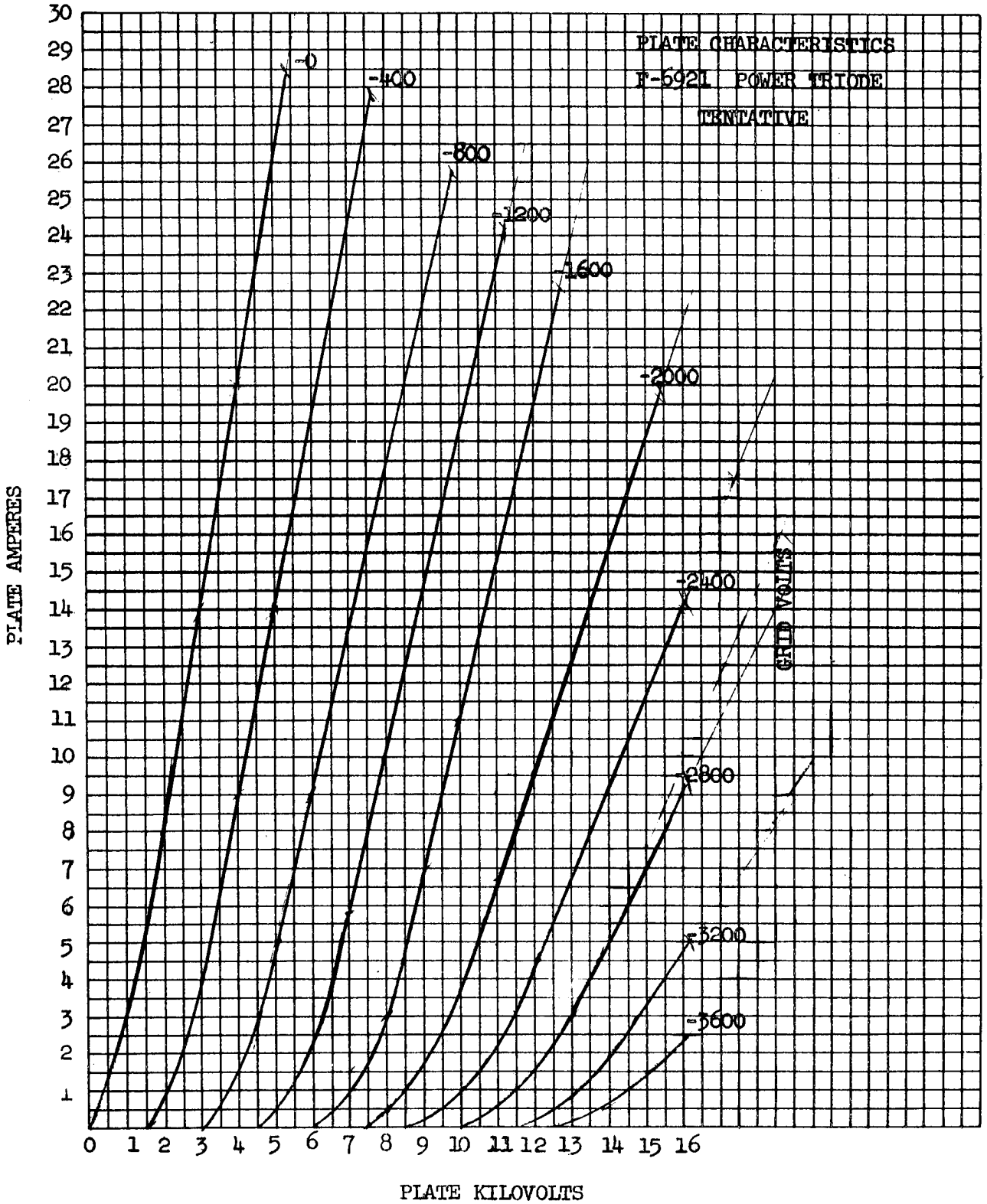

417

ITT COMPONENTS DIVISION
INTERNATIONAL TELEPHONE AND TELEGRAPH CORPORATION
P. O. BOX 412, CLIFTON, NEW JERSEY

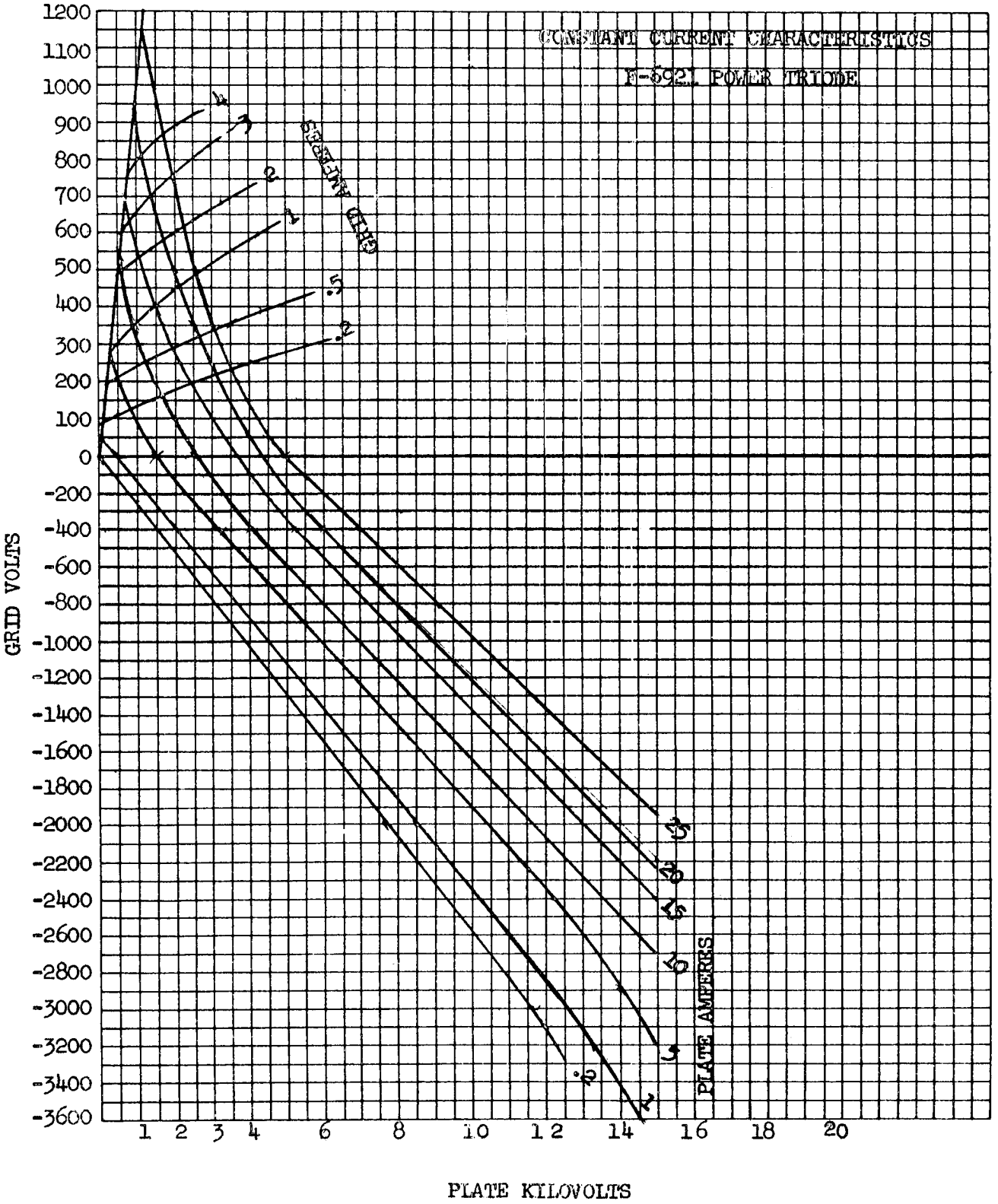
CONSTANT CURRENT CHARACTERISTICS
F-6921 POWER TRIODE
GRID AMPERES
PLATE AMPERES
GRID VOLTS
PLATE KILOVOLTS
1200
1100
1000
900
800
700
600
500
400
300
200
100
0
-200
-400
-600
-800
-1000
-1200
-1400
-1600
-1800
-2000
-2200
-2400
-2600
-2800
-3000
-3200
-3400
-3600
1 2 3 4 6 8 10 12 14 16 18 20

TERMINALS

BLACK - GRID
YELLOW- FIL. 1
RED - FIL. 2

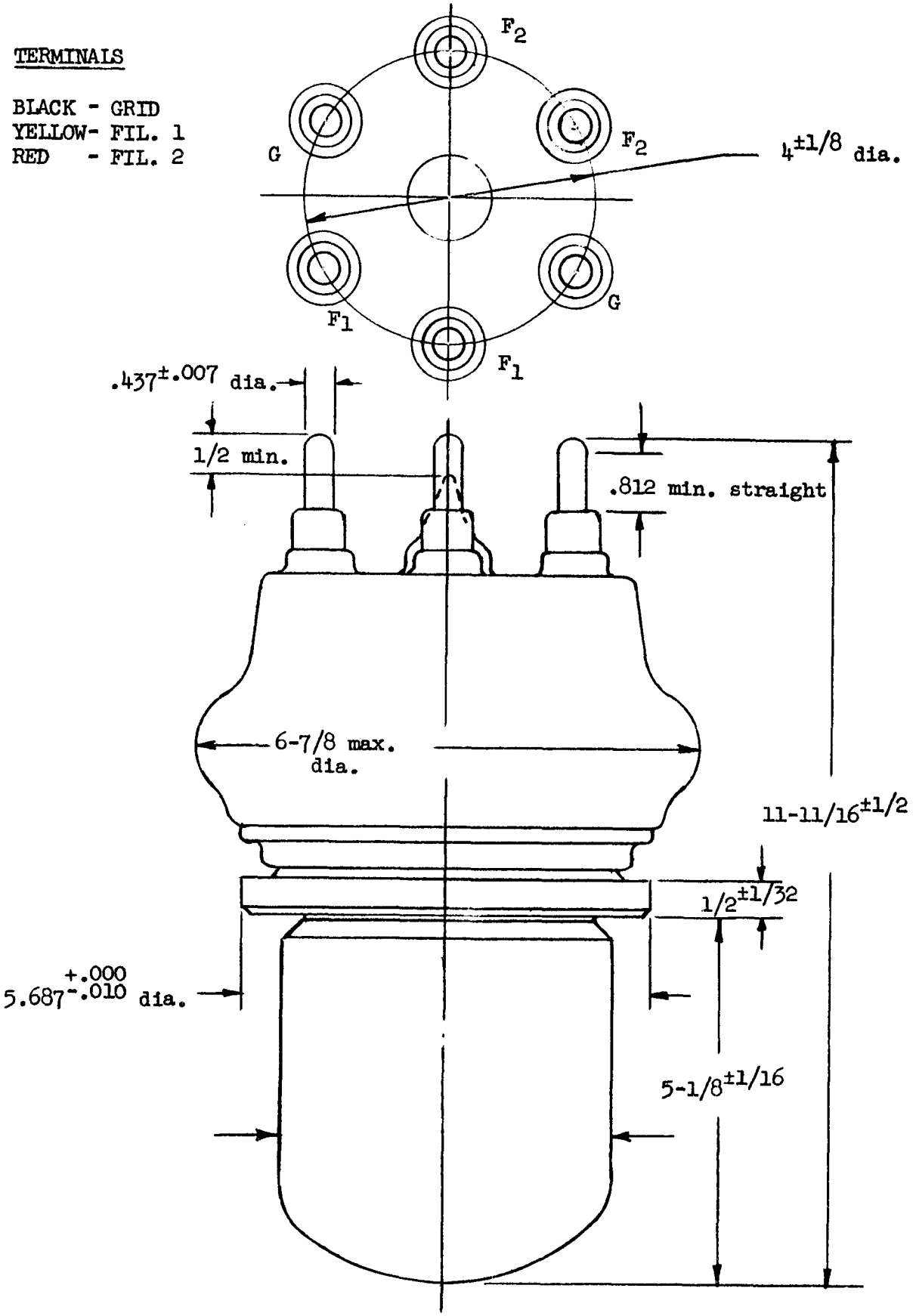

OUTLINE

F-6921 POWER TRIODE

ITT COMPONENTS DIVISION
INTERNATIONAL TELEPHONE AND TELEGRAPH CORPORATION
P.O. BOX 412, CLIFTON, NEW JERSEY