TENTATIVE DATA

IMAGE DISSECTOR

Type F4011

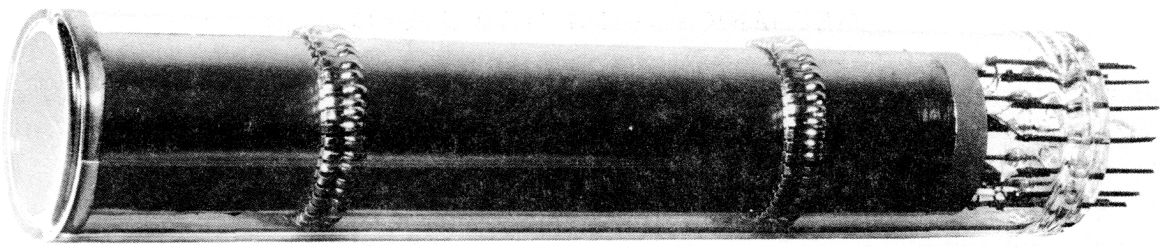

The F4011 model number designates a family of 1-1/2 inch diameter magnetically focused and deflected image dissector camera tubes. Image dissectors in this series can be provided with S-1, S-11, and S-20 type photocathodes, and with various scanning aperture shapes and sizes ranging from approximately 0.0005 inch to 0.35 inch (Notes 1 and 3).

The image dissector has several properties which make it well suited to such applications as slide-projector readers, hard-copy readers, electronically scanned spectrometers, flaw detectors for industrial process controls, and electronic star trackers. A few of these image dissector properties which should be considered when selecting an appropriate camera tube for a specific application are: (a) high resolution-determined primarily by the size of the defining aperture (b) nonstorage - allowing the scan rate to be varied without changing the signal current amplitude (c) reliable operation over a long period of time - simple rugged construction and lack of thermionic cathode and (d) linear dynamic range of several orders of magnitude.

GENERAL CHARACTERISTICS

Photocathode spectral response (Note 1)	S-1, S-11, or S-20 (See Figure 1)
Focusing method (Note 2)	Magnetic
Deflection method (Note 2)	Magnetic
Aperture size limits (Notes 1 and 3)	0.0005 to 0.350 inch
Number of dynodes (Note 4)	10

MECHANICAL CHARACTERISTICS

Window material	Corning 7056 or equivalent
Window index of refraction	1.5
Window thickness	0.080 ± 0.005 inch
Maximum useful photocathode diameter	1.1 inches
Maximum tube diameter	1.5 inches
Maximum over-all tube length	8.2 inches
Weight (approximate)	5.5 ounces
Base	Small button, 14 pin
Mounting position	Any

RECOMMENDED OPERATING CONDITIONS

Photocathode voltage	-2400 volts
Drift tube and dynode No. 1 voltage	-1800 volts
Dynode No. 2 voltage	-1645 volts
Dynode No. 3 voltage	-1490 volts
Dynode No. 4 voltage	-1335 volts
Dynode No. 5 voltage	-1180 volts
Dynode No. 6 voltage	-1025 volts
Dynode No. 7 voltage	-870 volts
Dynode No. 8 voltage	-715 volts
Dynode No. 9 voltage	-560 volts
Dynode No. 10 voltage	-325 volts
Anode voltage	0 volts
Ambient temperature	25° C
Nominal axial magnetic field strength with 600 volts between photocathode and drift tube/dynode No. 1 (Note 5)	40 gauss

TENTATIVE PERFORMANCE CHARACTERISTICS

For recommended operating conditions:

	Minimum	Typical	
Cathode luminous sensitivity (Notes 6 and 7)			
S-1	12	20	μa/lumen
S-11	30	40	μa/lumen
S-20	80	100	μa/lumen
Cathode peak radiant sensitivity (Note 7)			
S-1 (8000 Å)	--	0.0022	amperes/watt
S-11 (4400 Å)	--	0.032	amperes/watt
S-20 (4200 Å)	--	0.043	amperes/watt
Current amplification	5×10^4	5×10^5	
Typical paraxial resolution (Note 8)	--	1500	tv lines/inch
Typical off-axis resolution, static focus (Note 9)	--	800	tv lines/inch
Typical off-axis resolution, dynamic focus (Note 9)	--	1200	tv lines/inch
Image distortion	See Note 10		
Deflection linearity	See Note 11		

MAXIMUM RATINGS

Absolute Maximum Values

Average photocathode current density (Note 12)	10 $\mu a/cm^2$
Average anode current (Note 12)	100 μa
Peak anode current (Note 13)	250 μa
Ambient temperature	75° C
Over-all voltage	3400 volts
Photocathode to drift tube and dynode No. 1 voltage	1000 volts
First dynode to anode voltage	2400 volts
Dynode No. 9 to Dynode No. 10 voltage	300 volts
Last dynode to anode voltage	400 volts

NOTES

1. When ordering an F4011, two specifications in addition to the series designation "F4011" are required, namely: (1) the type of spectral response desired, and (2) the dimension of the defining aperture in mils. These two numerical specifications should follow the series designation in brackets as follows:

EXAMPLE 1: AN F4011 (S1, 2R). This calls for an F4011 image dissector with an S-1 type photocathode and a 0.002 inch diameter round defining aperture.

EXAMPLE 2: An F4011 (S-11, 1S). This calls for an F4011 image dissector with an S-11 type photocathode and a 0.001 inch x 0.001 inch square aperture.

EXAMPLE 3: An F4011 (S-20, 4 x 100). This calls for an F4011 image dissector with an S-20 photocathode and a 0.004 inch x 0.100 inch slit shaped rectangular aperture.

2. The F4011 is designed to utilize the standard deflection and focus coil assembly available commercially for 1-1/2 inch OD vidicons (such as the RCA 8051 vidicon). Custom built coils for improved resolution and reduced distortion are also available from ITTIL.

3. The F4011 is available with aperture sizes and shapes varying within the dimensional limits of 0.0005 inch and 0.35 inch. A typical aperture diameter would be 0.0015 inch. Added tooling costs may be involved if specialized sizes or shapes are required.

4. Additional dynodes can be supplied on special order.

5. All commercially available focus solenoids have a substantial variation in magnetic field intensity along the axis of the coil. For example, in the Cleveland Electronics CE1 15VFA-259 vidicon coil assembly, when the image section of the F4011 (5 inches long from photocathode to defining aperture) is centered in the focus field, the axial field strength varies by a factor of 2.5 from the extremes to the center of the drift space. By relocating the photocathode closer to the "waist" of the solenoid field, the ratio of magnetic flux density at the photocathode to flux density at the defining aperture is increased. Resultant image magnification increases resolution at the cost of S/N. This maneuver is equivalent to adjusting aperture size.

6. With 10^{-2} lumen source of 2870 degrees K color temperature (illumination normal to plane of window).

7. At 270 volts dc applied between photocathode and all other elements connected together.

8. For aperture sizes exceeding approximately 0.003 inch the resolution capabilities of the F4011 can be predicted quite accurately based on the known aperture size and shape. For example, an F4011 with a 0.010 inch square aperture will give very nearly 100 percent modulation when scanning a 100 tv lines per inch by (50 line pairs per inch, each line being 0 010 inch wide) pattern of equal light and dark bars at right angles with the square aperture aligned with the scan direction (assuming no bandwidth limitations on the response frequency) In the 0 001 inch to 0.003 inch size region and below, the absolute emission energy of the photoelectrons begins to play a significant role in the resolving power, depending on the wavelength of the input radiation, the type of photocathode, the accelerating voltage selected for the tube, etc. Figure 2 shows the measured paraxial resolution characteristics for an F4011 with a 0.001 inch round aperture under recommended operating conditions. The percentage modulation of 25 percent achieved in this tube at 1500 tv lines/inch (1000 tv lines/vertical raster height) is particularly noteworthy.

9. At 0.75 inch image diameter. The F4011 utilizes a unique new electron-optical design (patent applied for) to achieve optimum off-axis imaging properties. This new design represents a noteworthy improvement in the already excellent characteristics of the magnetic focusing - magnetic deflection combination used so successfully in image orthicon and vidicon television camera tubes, as well as in the majority of ITTIL image dissectors.

For many applications, particularly when using the F4011 with one of the larger apertures (See Note 4), off-axis resolution losses are difficult to observe experimentally. For smaller aperture tubes under limiting resolution conditions, the losses appear to be approximately as given. ITTIL should be consulted for the latest information on this parameter.

Static focus applies to a fixed focus condition, adjusted for optimum paraxial focus. Some over-all improvement in average resolution can be achieved by static focusing at some intermediate radial position instead.

Dynamic focus applies to a condition in which small adjustments in the focusing magnetic field or electric field are made in synchronism with the scan in order to achieve optimum focus at the particular image area being observed. Dynamic focus is required for the ultimate in over-all resolving power.

10. Image distortion in the F4011 has not yet been determined. Because of the unique electron optical design and the well known low distortion characteristics of solenoidal magnetic focusing and deflection (e. g. 1-1/2 inch vidicon), distortion is expected to be low, probably much less than 5 percent.

11. Linearity of deflection (scan position versus deflection current) in the F4011 is expected to be similar to the 1-1/2 inch vidicon, i. e. very good. Reproducibility of scan position versus deflection current is often of greater significance and is expected to be excellent provided the scan coils are not allowed to shift position with respect to the tube and various power supplies (focus, accelerating voltages, etc.) are stabilized. ITTIL should be consulted for up-to-date quantitative information on image distortion and scan linearity.

12. Averaged over any interval not greater than 1 second.

13. For 10-percent maximum departure from linearity of output current versus input flux.

14. Registered JEDEC response curve. All spectral responses are normalized to 100 percent following registered JEDEC recommendations. Permissible tolerances on these various registered S-response curves have been or are being established by JEDEC.

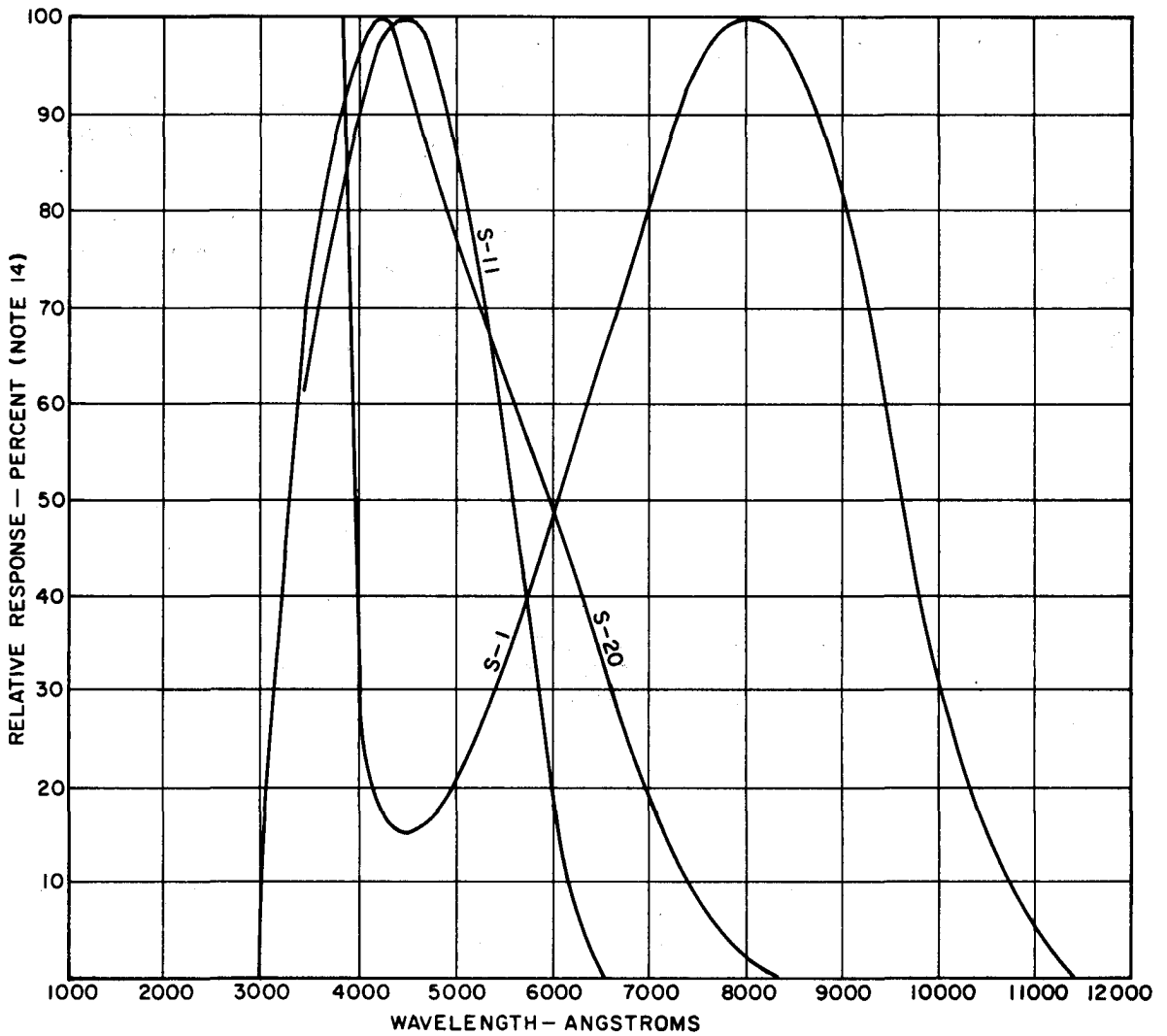

Figure 1 Spectral-Sensitivity Curves

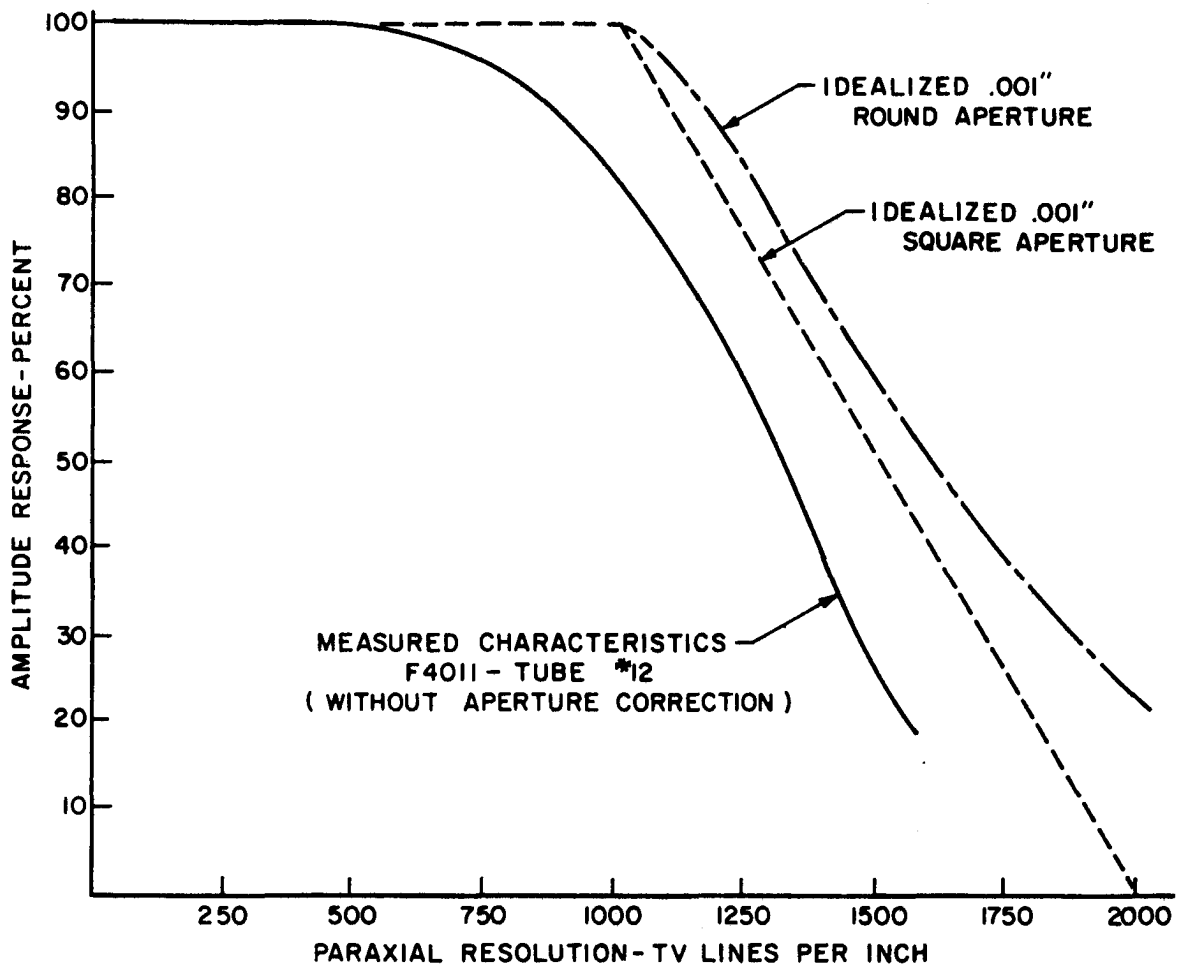

Figure 2 Resolution Characteristics

Outline Drawing

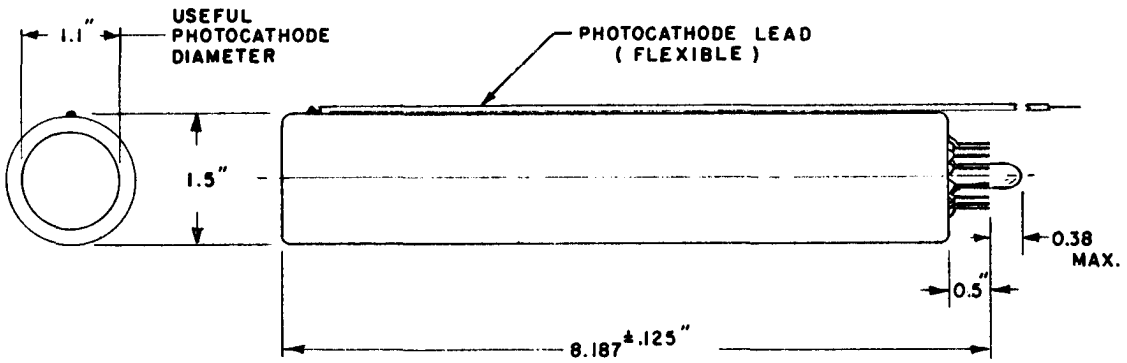

Pin Connections and Basing Diagram

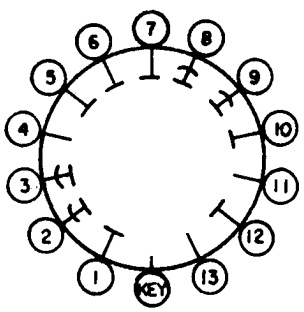

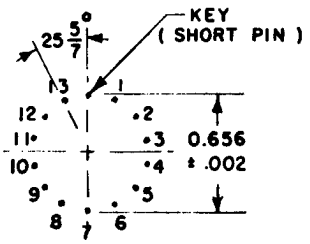

Pin 1 Anode	Pin 9 Dynode No. 2
Pin 2 Dynode No. 10	Pin 10 Drift Tube (DT)
Pin 3 Dynode No. 9	Pin 11 NC
Pin 4 NC	Pin 12 Shield
Pin 5 IC to DT	Pin 13 NC
Pin 6 IC to DT	Key NC (Short Pin)
Pin 7 IC to DT	Flying Lead Photocathode
Pin 8 Dynode No. 1	

IC - Internally Connected
NC - No Connection

Note: Pins 11 and 13 are internally connected to the drift tube in the F4011 (S-20).

1½ INCH
DEFLECTION AND FOCUS COIL ASSEMBLIES FOR F4011 VIDISSECTOR

DEFLECTION YOKES

ITTIL PART NO.	HORIZONTAL COIL Inductance mh	HORIZONTAL COIL Resistance ohms	HORIZONTAL COIL Typ. Defl. Sens. ma/in.	VERTICAL COIL Inductance mh	VERTICAL COIL Resistance ohms	VERTICAL COIL Typ. Defl. Sens. ma/in.
F4504	1.0	3.3	250	50.0	190.0	30
F4508	3.0	11.0	150	3.0	11.0	150
F4505	50	156	40	50.0	156	40

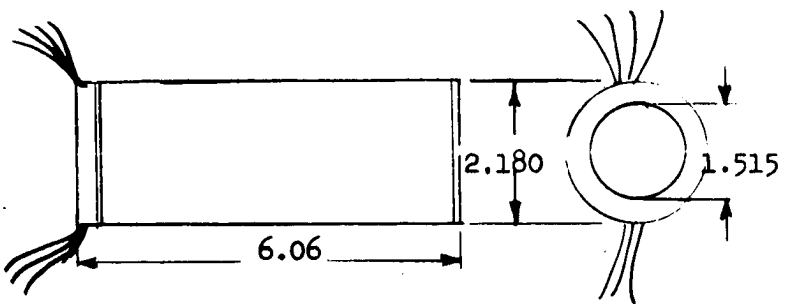

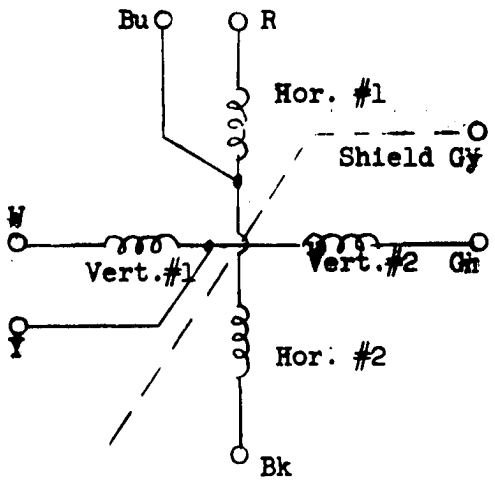

FOCUS COILS

ITTIL PART NO.	RESISTANCE ohms	AVERAGE CURRENT
F4506	700	40ma
F4507	50	200ma

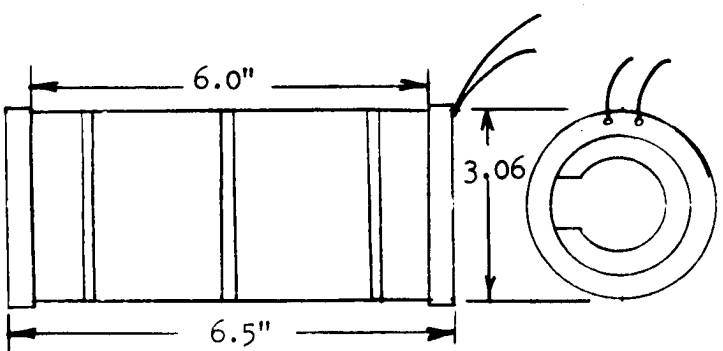

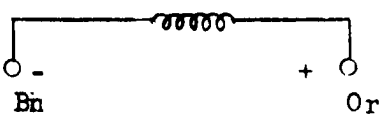

10-26-64