ESU74

HIGH VACUUM HALF WAVE RECTIFIER

RATING		
Filament Voltage (volts)	V_f	4.0
Filament Current (amps)	I_f	11.5
Maximum Peak Inverse Voltage (volts)	P.I.V. (max)	40,000
Maximum Mean Anode Current (mA)	$I_{a(av)max}$	80
Average Maximum Filament Emission (amps)	I_{em}	1.1
Maximum Anode Dissipation (watts)	P_a	50

DIMENSIONS		
Maximum Overall Length	(mm)	250
Maximum Diameter	(mm)	60
Approximate Nett Weight	(ozs)	7.0
Approximate Packed Weight	(lbs)	2.0
Approximate Packed Export Weight	(lbs)	2.0

MOUNTING POSITION—Vertical.

Associated Electrical Industries Limited
Electronic Components Division
Tel.: GERrard 9797

ESU74

HIGH VACUUM HALF WAVE RECTIFIER

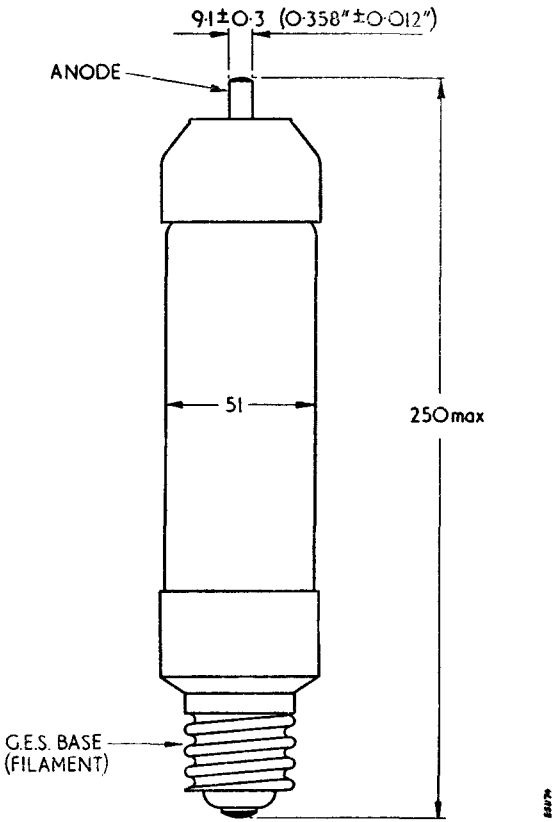

Associated Electrical Industries Limited
Electronic Components Division
Tel.: GERrard 9797

ESU74

HIGH VACUUM HALF WAVE RECTIFIER

TYPICAL CHARACTERISTIC CURVES: I_a/V_a

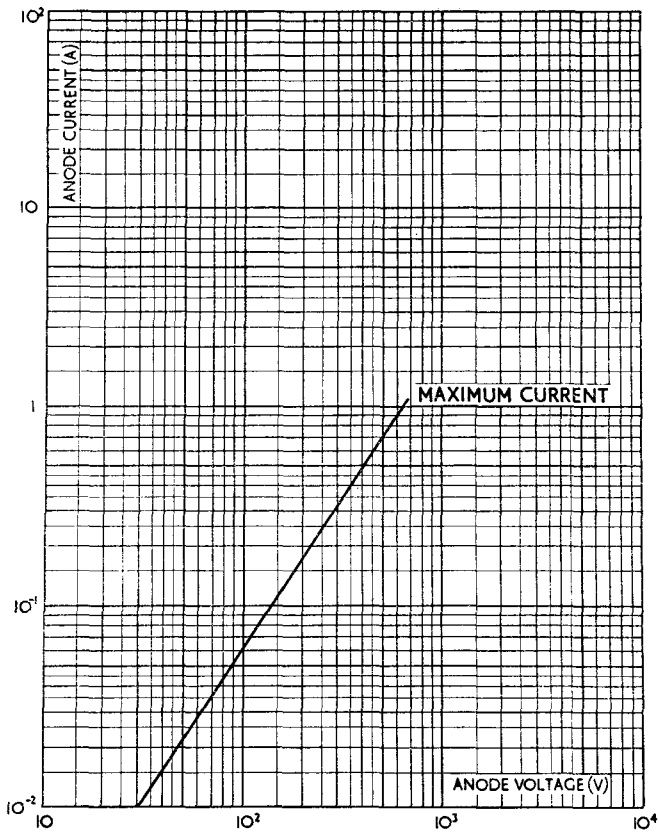

Associated Electrical Industries Limited
Electronic Components Division
Tel GERrard 9797