EIMAC

A Division of Varian Associates

SAN CARLOS, CALIFORNIA

EM1310

MAGNETICALLY SHIELDED VOLTAGE TUNABLE MAGNETRON

500 -1000 Mc

100 mw

DESCRIPTION

The EM1310 Voltage Tunable Magnetron Oscillator delivers at least 100 mw over the frequency range of 500-1000 Mc. This miniature magnetically shielded oscillator is ideally suited for applications requiring compact lightweight packaging. Its unique magnetic circuit results in negligible external magnetic field and permits the tube to contact other ferromagnetic materials with no degradation in performance.

FEATURES

- Magnetically Shielded
- Light Weight
- Linear Voltage Tuning
- Small Size
- Flat Power Output
- Rugged

TYPICAL PERFORMANCE

ELECTRICAL

Frequency Range	500-1000 Mc
Anode Voltage	920-1840 V
Cathode Current	0.5-2 mA
Typical Power Output	150 mw
Anode FM Sensitivity	0.55 Mc/V
Injection Anode Voltage	150 Volts
Injection Anode Current	0.0 mA
Heater Voltage (AC or DC)	6.3 Volts
Heater Current (AC or DC)	0.86 Amp
Load Impedance	50 Ohm
Load VSWR	1.1:1
Power Variation	±1 db

MECHANICAL

Operating Position	Any
Cooling	Conduction
Electrical Connection	Flying Leads
RF Output Coupling	TNC Female
Weight	1.5 lbs. max.

MAXIMUM RATINGS*

Anode Voltage	2200 Volts
Cathode Current	10 mA
Injection Anode Voltage	500 Volts
Injection Anode Current	1 mA
Load VSWR	3:1

*Damage to the tube may occur if maximum ratings are exceeded.

~~(Effective 12-15-51) Copyright 1965 by Varian Associates~~

(Effective 12-15-65) Copyright 1965 by Varian Associates

NOTES:

1. The operating frequency is a function of the anode voltage; therefore any voltage ripple on the anode supply appears as frequency modulation on the RF output.
2. The heater supply may be either alternating or direct current. If direct current is used, the heater connections *must* be connected to the negative terminal of the heater supply.
3. Cooling—To insure optimum tube performance, the magnet shell should be maintained below 70° C.
4. Temperature Stability — The permanent magnet of the shielded VTM has been temperature stabilized to minimize frequency changes caused by variations in the magnet temperature. The temperature/frequency coefficient for the shielded VTM is 0.008% of the operating frequency per degree centigrade. A positive change in temperature will always produce a positive change in frequency.

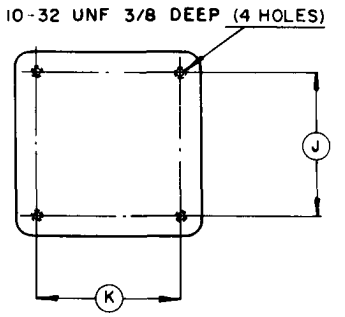

DIMENSIONS IN INCHES

DIMENSIONAL DATA			
REF.	MIN.	MAX.	NOM.
A		3.050	
B	1.200	1.800	
C	1.300	1.700	
D		3.050	
E	.300	.500	
F	.700	.900	
G		2.300	
H		1.525	
J	2.320	2.380	
K	2.320	2.380	

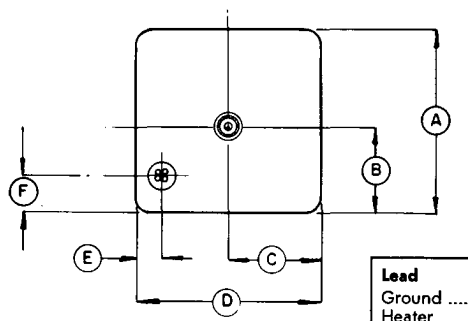

Lead	Color Code
Ground	Black
Heater	Blue
Heater Cathode	Red
Injection Anode	White

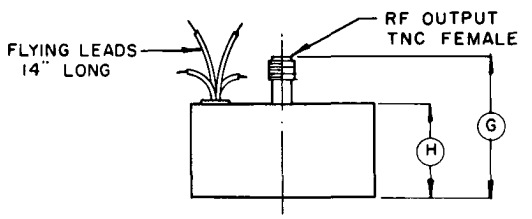
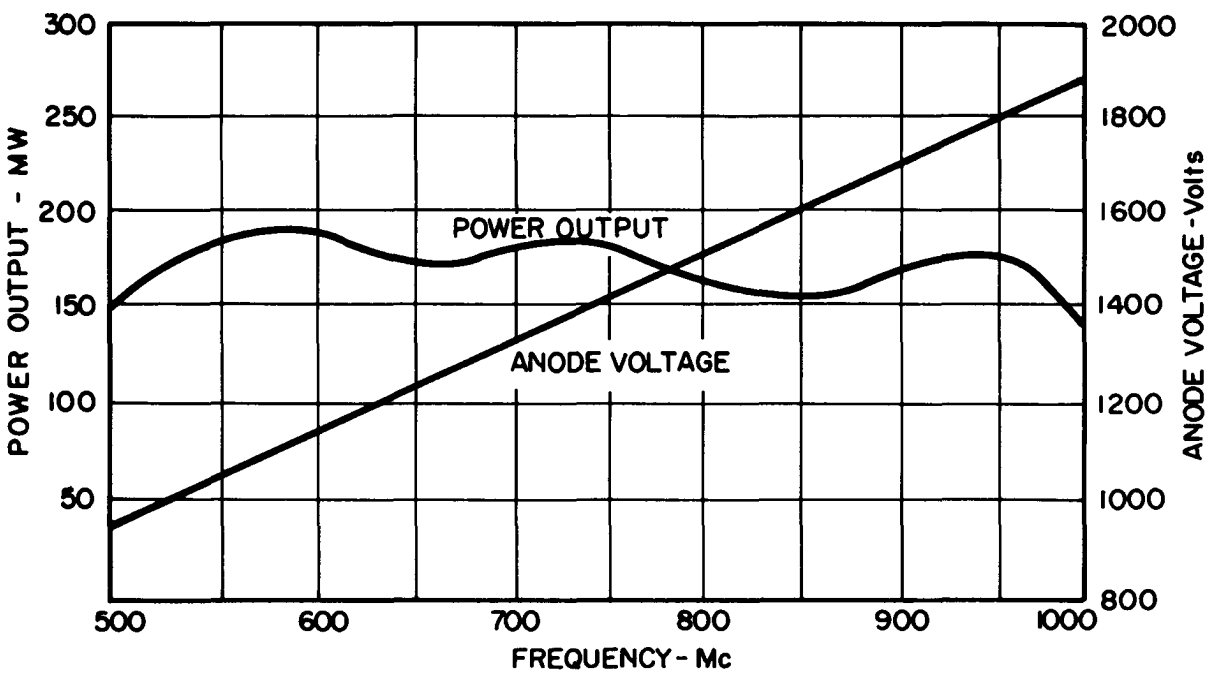
CHARACTERISTIC CURVES
Typical Performance Values